Number groups after call letters denote following: Band (A = all; an additional A is All Band Assisted; A after each band is Assisted for that band), Final Score, Number of QSOs, and Prefixes. An asterisk (*) before a call indicates low power. Line scores in italics indicate late log received (past the deadline). Certificate winners are listed in boldface. (Note that the country names and groupings reflect the DXCC list at the time of the contest.)

2015 WPX CW RESULTS
SINGLE OPERATOR
NORTH AMERICA
UNITED STATES

United States –District 1

K1LZ	**A**	**11,378,556**	**3352**	**1044**
KM3T/1	"	10,836,720	3349	1038
			(OP:N2NT)	
WC1M	"	10,552,940	3109	1049
NV1N	"	7,505,100	2598	930
			(OP:N1UR)	
AK1W	"	7,319,780	2449	940
			(OP:K5ZD)	
K1KI	"	4,213,351	1615	769
W1KM	"	1,137,955	746	455
K1RX	"	1,136,340	859	531
WA2HIP/1	"	154,093	292	223
K1BV	"	132,210	249	195
NM1JY	"	85,278	209	183
N1NN	"	34,770	158	122
KE1R	"	7,965	64	59
W1XX	**7**	**183,360**	**240**	**191**
***NZ1U**	**A**	**4,026,750**	**1588**	**750**
			(OP:W1UJ)	
*NB1N	"	1,645,125	1022	535
*KZ1M	"	622,905	596	393
(OP:W1EQ)				
**K1TR*	*"*	*588,260*	*518*	*335*
**AA1SU*	*"*	*424,099*	*475*	*323*
*W1TO	"	347,215	407	295
*W1IS	"	315,684	414	316
*W1GD	"	219,209	251	223
*N1IX	"	161,190	253	199
*WC4E/1	"	128,380	242	196
*KX1E	"	99,360	197	160
*K1HT	"	37,240	104	95
*W1MJ	"	34,832	123	112
*KG1K	"	34,335	112	105
*K1RO	"	27,977	108	101
*W1PID	"	26,112	109	96
*WA1N	"	17,266	100	89
*WA1Z	"	12,556	81	73
*KB1BMF	"	9,548	64	62
*W1BJ	"	4,606	52	47
*AA9DY/1	"	3,738	42	42
WU3A/1	**AA**	**8,815,716**	**2714**	**1092**
WZ1R	"	7,624,738	2465	986
			(OP:N1RR)	
KD2GYF/1	"	7,615,730	2290	995
			(OP:SP4Z)	
WK1Q	"	5,212,650	1833	930
			(OP:K1MK)	
K1AR	*"*	*2,962,376*	*1441*	*706*
NG1R	"	2,599,966	1314	667
			(OP:W1QK)	
AE1T	"	1,656,072	1018	594
W8HAP/1	"	959,400	725	492
W1EBI	"	693,528	594	407
K1GQ	"	528,060	552	390
K3IU/1	"	365,148	413	324
K1TH	"	191,530	276	214
WA1DRQ	"	170,586	272	234
K1ESE	"	170,391	283	221
KB1W	"	136,836	219	181
NU1O	"	85,514	191	169
N1MD	"	6,811	50	49
W1QI	**28A**	**800**	**23**	**20**
			(OP:NG1R)	
KI1U	**21A**	**128,088**	**243**	**216**
W1WMU	**3.5A**	**259,455**	**342**	**245**
***KS1J**	**AA**	**4,060,348**	**1609**	**841**
*W1CCE	"	620,400	572	376
*N1API	"	443,562	414	413
*W1/YO7ARY	"	391,380	485	330
*NJ1T	"	172,500	268	230
*KU1N	"	58,855	183	149
*K1IG	"	33,746	104	94
*KV1J	"	32,239	117	103
*W1DYJ	"	28,551	97	93
*WA1ZYX	"	15,642	85	79
*AD1L	"	5,117	44	43
*KE1J	"	1,860	23	20
***N1VVV**	**28A**	**216**	**10**	**9**
***AB1J**	**21A**	**228,438**	**349**	**294**
*WT1A	"	90,016	207	194

United States - District 2

K3EL/2	**A**	**5,087,208**	**1973**	**849**
WN2O	"	4,417,010	1800	793
(OP:N2GC)				
K2UF	"	1,843,688	1065	574
NX2X	"	1,764,192	1010	564
WS9M/2	"	962,634	836	498
K2NV	"	163,680	294	220
KZ2R	"	144,160	256	212
WA2CP	"	21,894	92	89
(OP:KC2GOW)				
NN5J/2	**21**	**4,308,464**	**1877**	**904**
(OP:K5GO)				
KU2M	"	3,372,120	1636	855
N2JJ	"	42,704	138	136
***K2TTM**	**A**	**1,545,805**	**903**	**505**
*NF2RS	"	757,552	682	452
(OP:K2ZR)				
*KE2D	"	681,720	611	380
*N2UU	"	679,960	649	382
*KC2IGE	"	395,164	442	308
*W2ID	"	367,172	429	307
*NW2K	"	309,160	377	262
*N2RI	"	261,360	369	270
*K2KIB	"	158,220	261	180
*N2BEG	"	136,960	255	214
*AG2AA	"	95,392	245	176
*AC2IK	"	94,336	222	176
*AC2OC	"	31,719	117	109
*WA3YRI/2	"	29,008	126	112
**K2CDX*	*"*	*28,938*	*118*	*106*
*KA2FHN	"	22,700	114	100
*AC2LA	"	18,860	99	92
*K1SXD/2	"	12,798	62	54
*AA2TH	"	8,694	63	54
*KM2L	"	6,768	49	47
*KR2Q	"	5,633	46	43
*KV2X	"	5,246	66	61
***K2TV**	**21**	**504**	**14**	**14**
***W2EG**	**7**	**990,935**	**608**	**419**
AB3CX/2	**AA**	**8,171,361**	**2594**	**1019**
W2LK	"	3,514,989	1606	771
W2YC	"	2,788,566	1283	759
AB2E	"	2,067,390	1148	585
KU2C	"	1,983,828	1052	627
K2MK	"	1,939,410	1131	594
W2LE	"	1,662,878	901	574
KD2RD	"	1,019,508	728	458
WQ2N	"	675,680	575	410
K2CYE	"	473,796	476	321
NA2M	"	315,648	375	288
K2QMF	*"*	*271,694*	*331*	*262*
WA2MCR	"	93,366	226	189
KA2D	"	42,435	131	123
WB2NVR	"	20,640	89	80
W2HUV	"	19,992	70	68
W2YR	"	18,011	86	83
K2YR	"	560	14	14
N2UN	**3.5A**	**27,792**	**88**	**72**
***NM2O**	**AA**	**496,027**	**520**	**371**
*W2RDS	"	472,320	479	320
*WW2P	"	452,076	481	373
*WB9G/2	"	277,104	374	276
*K2ZC	"	172,050	276	222
*W2FDJ	"	165,244	289	218
*W2GDJ	"	108,781	215	181
*N2FF	"	50,786	137	134
*AI2I	"	25,344	100	96
*AG2T	"	21,590	89	85
*KB2URI	"	2,128	28	28
***WA2JQK**	**7A**	**51,480**	**169**	**130**

United States - District 3

KC3R	**A**	**12,574,257**	**3526**	**1121**
			(OP:LZ4AX)	
AA3B	"	9,178,665	2955	1005
K3ZO	"	6,618,583	2274	947
WM3T	"	5,885,622	2019	846
(OP:N3KS)				
K3UL	"	1,306,164	851	534
W3FV	"	568,521	514	349
K3UA	*"*	*534,296*	*534*	*392*
AB3TM	"	399,840	435	340
K3VA	"	229,658	324	242
W3KL	"	223,124	306	242
N3XF	**14**	**276,900**	**348**	**300**
AI3Q	"	9,860	59	58
W3LL	**7**	**1,827,657**	**858**	**533**
			(OP:ND3D)	
W3BGN	**3.5**	**317,909**	**394**	**257**
NA1DX/3	"	120,546	272	181
***W2MMD/3**	**A**	**1,338,370**	**937**	**529**
			(OP:WK2G)	
*KB3LIX	"	563,904	547	352
*ND3R	"	256,785	337	265
*KW3F	"	200,143	322	263
*K3KU	"	121,270	258	181
*N3NZ	"	111,639	259	199
*WC3N	"	43,795	100	95
***NJ3K**	**14**	**352,179**	**475**	**359**
*KE3O	"	903	20	21
***KX2S/3**	**7**	**118,776**	**180**	**168**
*AI3G	"	34,300	111	100
N3RR	**AA**	**7,434,558**	**2471**	**999**
K3WW	"	6,894,622	2203	982
K3MD	"	4,489,764	1952	822
K3AJ	"	4,368,632	1838	779
N3QE	"	3,859,726	1651	754
NG3R	"	3,829,837	1566	827
			(OP:K9RS)	
AB3CV	"	2,736,034	1354	667
NO7R/3	"	2,728,651	1215	713
			(OP:N3DXX)	
NW3Y	"	2,162,093	1142	641
N3RS	"	1,839,661	1013	601
W2CDO/3	"	1,781,648	980	583
NN3RP	"	773,055	658	419
NB3R	"	755,307	616	399
K3ZU	"	653,559	460	393
K3IT	"	607,523	583	413
N3AM	"	448,723	408	361
K3ND	"	409,656	426	303
NB3I	"	327,137	384	277
NO3M	"	308,550	377	275
W3JX	"	294,408	314	261
NK3Y	"	292,560	387	276
KK3TN	"	247,748	326	257
			(OP:K3TN)	
W3GVX	"	106,352	203	184
NS3L	"	96,832	187	178
W3BW	"	42,375	118	113
WV2M/3	"	4,100	41	41
2PLF/3	*21A*	*85,842*	*189*	*171*
K3OQ	**"**	**7,897**	**54**	**53**
KT3M	**14A**	**3,701,200**	**1603**	**950**
			(OP:N3AD)	
WG3J	**7A**	**1,030,335**	**603**	**447**
WA3AAN	"	720,263	484	373
W3OD	"	32,895	85	85
***W3KB**	**AA**	**2,011,392**	**1030**	**648**
*AA3S	"	763,140	652	420
*K3WJV	"	616,848	608	362
*NZ3D	"	504,084	521	357
*ND3N	"	267,104	346	272
*K3NDM	"	228,438	347	259
*AB3RU	"	165,240	281	255
*KA1SSU/3	"	81,356	226	172
**N3HEE*	*"*	*65,031*	*207*	*159*
*K3FH	"	55,080	154	135
*W3SFG	"	52,890	125	123
*K3RMB	"	29,640	120	104

United States - District 4

NJ4M	**A**	**5,992,760**	**2450**	**932**
			(OP:K5KG)	
WQ4F	"	5,023,326	2064	917
			(OP:N4PN)	
AD4TR	"	4,475,439	2093	837
WR3O/4	"	4,443,520	1980	848
			(OP:K4RO)	
K4PV	"	3,351,859	1725	763
KØZR/4	"	2,149,161	1212	609
N4NO	"	2,128,576	1216	632
WW4R	"	1,011,636	885	513
			(OP:N4ZZ)	
KM4FOC	"	987,698	797	479
K9UQN/4	"	830,515	780	427
KU8E/4	"	747,785	728	431
W9WI/4	"	669,218	637	418
KR4F	"	544,902	543	394
NJ4F	"	439,707	485	309
K7OM/4	"	389,649	501	309
KE1F/4	"	318,802	471	337
N4AA	"	306,530	380	290
N4UC	"	286,676	386	298
N4UEZ	"	260,585	353	247
N4DU	"	247,280	377	281
N4FP	"	88,740	194	153
W7HJ/4	"	33,813	134	117
N4CU	"	288	18	18
WN1GIV/4	**21**	**3,230,699**	**1653**	**859**
			(OP:N4BP)	
N3JT/4	"	45,804	145	132
AI4WW	"	7,581	60	57
K4EU	**7**	**36,955**	**95**	**95**
AC4G	**3.5**	**3,216**	**24**	**24**
***AD4Z**	**A**	**4,882,213**	**2003**	**833**
*W4IX	"	3,999,091	1734	821
*NR3X/4	"	3,669,534	1783	774
			(OP:N4YDU)	
*W4YE	"	1,453,683	920	539
*AD8J/4	"	1,394,406	920	531
*K4LTA	"	1,115,886	931	537
*K4ORD	"	573,252	579	372
*WØQQG/4	"	320,682	412	291
*W4OC	"	310,080	348	272
*WA5POK/4	"	263,082	366	269
*N4CF	"	261,261	356	261
*K1TN/4	"	249,360	337	240
*K4FJW	"	208,985	353	245
*K1GU/4	"	175,032	266	221
*KJ4IWZ	"	94,760	249	184
*W4NFT	"	73,179	164	141
*W4EEH	"	64,860	175	138
*AA4KD	"	63,992	184	152
*WA4WPD	"	60,568	158	134
*KU4V	"	58,984	163	146
*N3ZV/4	"	49,140	152	130
*NY4G	"	38,227	150	127
*W4VG	"	31,536	123	108
*K4UQ	"	24,656	98	92
*W4WWQ	"	21,238	82	74
*N4EK	"	19,840	95	80
*AI4GR	"	19,008	96	88
*KD4YDD	"	14,800	80	80
*N5TOO/4	"	13,930	72	70
*KJ4UC	"	12,090	85	78
*KO4OL	"	10,440	81	72
*N4ARO	"	9,030	47	43
*KD4JMV	"	8,845	64	61
*KQ4Y	"	8,142	66	59
*KM4FO	"	7,800	81	75
*KA3MTT/4	"	7,373	88	73
*KV4MO	"	5,856	49	48
*KI4CBN	"	5,418	48	43
*AI4UN	"	4,815	50	45
*NX4N	"	3,360	37	32
*K4LJG	"	2,992	37	34
*WA4NIV	"	2,625	36	35
*K4BB	"	2,516	36	34
*KT5W/4	"	2,296	28	28
*W4ZPR	"	1,386	22	22
*NØKOE/4	"	1,066	31	26
*K4MZE	"	680	18	20
*KE4QCM	"	162	9	9
***KN4Y**	**28**	**8,512**	**67**	**56**
*N2WN/4	"	1,178	22	19
***WB4TDH**	**21**	**951,230**	**723**	**535**
*WA1FCN/4	"	491,618	538	409
*WF7T/4	"	413,292	483	372
*KM4HI	"	175,016	289	262
***N4HA**	**14**	**198,810**	**303**	**282**
*N3TG/4	"	26,368	103	103
*WA4FJK	"	240	10	10
***WN4AFP**	**7**	**225,147**	**382**	**251**
***K3TW/4**	**3.5**	**70,148**	**178**	**142**
***K4WI**	**1.8**	**102**	**8**	**6**
NQ4I	*AA*	*9,151,856*	*2701*	*1148*
			(OP:VE7ZO)	
WO4O	**"**	**5,367,802**	**2172**	**902**
N6AR/4	"	3,009,201	1395	741
NF4A	"	2,724,796	1435	727
W4BQF	"	1,551,760	964	595
KE4KY	"	1,512,250	982	575
WE4M	"	998,374	700	494
			(OP:N4UA)	
N4IQ	"	982,832	775	488
N4NA	"	684,000	628	375
AA4DD	"	650,546	637	382
KG4W	"	518,196	523	372
W4VIC	"	458,796	462	346
NS4X	"	335,072	448	296
NX4Y	"	321,034	425	322
			(OP:W4LT)	
N3UA/4	"	316,098	398	306
N4KH	"	224,884	331	269
K4OV	"	205,436	313	253
N3KN/4	"	191,784	312	244
N4DW	"	51,816	146	136
ND4V	*"*	*44,250*	*144*	*118*
W4XO	"	43,014	110	107
NW7M/4	"	23,000	93	92
N3ND/4	"	22,088	103	88
WA2MBP/4	"	14,271	71	67
KM4JA	*"*	*8,188*	*47*	*46*
W4EAB	"	3,315	39	39
N4ES	"	1,330	24	19
KB4FB	"	45	5	5
K4OAQ	**21A**	**1,393,988**	**929**	**619**
W4NZ	"	194,806	301	257
AD4EB	**14A**	**2,168,388**	**1165**	**804**
AA4VV	"	159,384	257	232
K4LQ	*"*	*90,404*	*195*	*194*
AF4RK	"	50,516	164	146
W4PK	**3.5A**	**42,824**	**111**	**106**
**WW4SF*	*AA*	*2,653,500*	*1343*	*732*
			(OP:N4XL)	
***K3IE/4**	**"**	**2,048,904**	**1174**	**597**
*W4TTM	"	577,500	560	350
*N8FF/4	"	527,947	576	379
**WK4AA*	*"*	*504,455*	*499*	*355*
*N4KM	"	457,431	477	317
*N4WO	"	350,436	480	318
*WD4AHZ	"	138,675	235	215
*W4BW	"	57,408	157	138
*N4TL	"	37,180	123	110
**K4NC*	*"*	*33,562*	*105*	*97*
**KC2NYU/4*	*"*	*24,453*	*120*	*99*
*WB4MNK	"	15,246	86	77
*KB4KBS	"	4,816	43	43
*N4YHC	"	3,157	45	41
*K3SEN/4	"	2,618	34	34
*K4FDP	"	2,349	31	29
*AB4IQ	"	1,690	28	26
*AD4YQ	"	1,540	22	22
*W4JUU	"	220	10	10
***NA4W**	**28A**	**35,280**	**138**	**112**
(OP:K4WI)				
*NA3M/4	"	6,784	54	53
***W4JDS**	**21A**	**945**	**21**	**21**
***K4WW**	**7A**	**28,764**	**114**	**94**

United States - District 5

KN5A	**A**	**7,675,959**	**2899**	**1003**
			(OP:K5WA)	
N8OO/5	"	6,619,826	2649	1042
WD5K	"	3,608,295	1716	821
WQ5L	"	1,859,848	1177	607
KØNM/5	"	1,257,556	1037	586
N5RZ	"	1,077,903	887	523
N7FUL/5	*"*	*792,580*	*771*	*460*
K7IA/5	"	529,240	590	404
NE5D	"	501,600	503	352
			(OP:K5RX)	
W8FN/5	"	447,180	520	348
WA2VYA/5	"	176,559	309	229
KK5JY	"	97,280	209	190
KJØD/5	*"*	*89,614*	*210*	*173*
W5THT	"	2,656	33	32
KZ5J	**21**	**487,224**	**564**	**404**
N4OGW/5	**14**	**392,766**	**493**	**363**
***N5AW**	**A**	**6,317,732**	**2392**	**989**
*K5KU	"	2,915,930	1535	745
*W5RYA	"	1,237,861	979	547
*N5KWN	"	620,075	673	425
*K5ME	"	370,944	440	322
*NO5W	"	357,072	495	346
*K8LS/5	"	238,293	370	261
*K5XU	"	138,528	271	222
*NN5T	"	121,056	246	194
*WQ5R	"	112,560	249	201
*WA5RML	"	103,596	290	194
*W5LA	"	96,278	235	182
*KT5V	"	94,458	218	182
*N5XE	"	75,500	166	151
*K5KUA	"	55,626	143	127
*AF5T	"	28,441	133	119
*W5QLF	"	16,928	105	92
*WE6EZ/5	"	11,895	70	65
*K7ZYV/5	"	5,049	50	51
*K5DHY	"	4,956	42	42
***WR5O**	**21**	**487,179**	**566**	**407**
AC4CA/5	**AA**	**1,441,888**	**1005**	**574**
K6ZB/5	*"*	*551,307*	*507*	*381*
W5GDX	"	487,084	540	377
KK7JS/5	"	479,960	473	355
K5NZ	"	381,060	472	348
K5WK	"	229,770	333	270
KC5FU	"	157,232	298	248
			(OP:N5QQ)	
AG5S	*"*	*144,536*	*308*	*232*
AF5I	"	85,444	167	164
N5UI	"	54,864	169	144
K5WL	"	45,850	140	131
K5ER	"	30,140	114	110
K6RV/5	"	18,176	81	71
KM5PS	**21A**	**255,549**	**378**	**301**
KA5M	**14A**	**196,112**	**303**	**272**
KN5V	**7A**	**1,329,622**	**711**	**511**
			(OP:W5TM)	
***N5MF**	**AA**	**205,110**	**379**	**265**
*AD5XD	"	54,432	160	144
*N5TIT	"	37,842	133	119
*WF5E	"	18,216	110	99
*W4JHC/5	"	684	20	18
***W5BM**	**14A**	**31,395**	**120**	**115**
*N5IKD	"	8,976	71	68
*WØEA/5	"	7,869	63	61

United States - District 6

NF6A	**A**	**8,107,560**	**2787**	**1080**
			(OP:K6XX)	
KR7O/6	"	7,428,796	2845	1021
			(OP:N6TV)	
KX7M/6	"	5,359,760	2321	952
N5ZO/6	"	4,704,978	2229	866
W6YX	"	3,497,460	1736	852
			(OP:N7MH)	
K6NR	"	2,375,340	1394	708
NA6MG	"	695,106	688	438
N6RK	"	533,280	591	404
K6LRN	"	526,161	510	381
N6AA	"	339,282	435	309
WA6URY	"	304,416	423	302
NN6DX	"	294,516	407	303
			(OP:W1PR)	
NI6W	"	276,555	411	309
			(OP:W4EF)	
AC6SL	"	147,722	326	233
K6AR	*"*	*121,509*	*267*	*207*
AA6W	"	101,541	282	187
KM6I	"	88,572	222	183
WT6K	"	70,692	216	172
KØNW/6	"	67,716	186	162
KO6LU	"	32,963	143	119
K6YK	"	26,775	125	105
W4NJK/6	"	10,575	85	75
N6TH	*"*	*8,823*	*56*	*51*
W6RKC	**3.5**	**3,969**	**54**	**49**
***KI6RRN**	**A**	**2,393,640**	**1644**	**732**
*WN6K	"	1,106,820	1044	495
*NN6CH	"	689,325	706	455
*N6MU	"	651,000	603	434
*KM6Z	"	636,004	785	398
*NW6H	"	500,391	605	387
			(OP:N3ZZ)	
*K6KQV	"	87,606	226	186
*AF6GA	"	59,904	216	156
*NC6Q	"	47,724	219	164
*K6CSL	"	39,150	158	135
*AA6GI	"	35,508	142	132
*N6LL	"	28,956	126	114
*K6TIG	"	22,050	100	90
*KB6A	"	16,517	87	83
*K6DGQ	"	12,032	110	94
*KI6OY	"	5,529	70	57
**N6BCT*	*"*	*195*	*15*	*13*
*WA6FWN	"	6	2	2
***NP4IW/KY6**	**21**	**91,770**	**294**	**210**
*N6MUF	"	8,395	77	73
*N6BHX	"	1,152	25	24
***W7XZ/6**	**14**	**105,560**	**226**	**203**
***K5CAO/6**	**3.5**	**23,763**	**116**	**89**
KU6W	**AA**	**3,678,534**	**1798**	**841**
			(OP:K9YC)	
W6TK	"	3,440,464	1628	808
N6JV	"	2,144,532	1296	708
WX6V	"	2,005,966	1155	697
KU6F	"	1,745,840	1179	628
			(OP:K6SRZ)	
KA3DRR/6	"	1,686,808	1096	632
WA6KHK	"	1,430,416	1033	598
K6RC	"	986,436	861	517
W6SX	"	921,672	986	502
WQ6K	"	708,125	560	515
NE6I	"	477,055	681	365
N2NS/6	"	464,724	444	331
K6IJ	"	451,904	554	368
NO6T	"	446,512	585	344
			(OP:N6NC)	
K6RIM	"	348,096	398	336
NK6A	"	286,752	460	309
AK6M	"	285,740	415	314
			(OP:K6MM)	
W6NS	"	112,359	251	201
WE6Z	"	75,082	199	173
K6RR	"	51,625	145	125
KF6I	"	30,070	109	97
NN6NN	"	27,225	99	99
			(OP:W6XK)	
AI6Z	"	18,144	84	72
W6GJB	*"*	*5,096*	*51*	*49*
KI6QDH	"	600	22	20
K6IFF	"	574	15	14
WC6H	**14A**	**1,252,484**	**879**	**601**
W4UAT/6	"	507,996	509	412
***NA6O**	**AA**	**305,700**	**452**	**300**
*K6AAB	"	119,180	271	202
*KE6QR	"	118,770	260	214
*W6KY	"	89,925	234	165
*K6GT	"	73,120	181	160
*KR6N	"	69,806	216	167
*NC6RJ	"	11,505	62	59
**W6JBR*	*"*	*4,522*	*45*	*38*
***N6IC**	**14A**	**19,201**	**94**	**91**

United States - District 7

NR7DX	**A**	**9,018,128**	**3156**	**1103**
			(OP:N9RV)	
KM9R/7	"	6,036,624	2533	927
			(OP:K7GK)	
KW7Y	"	2,279,088	1220	646
			(OP:K7RL)	
AA7V	"	2,012,100	1381	706
W6AEA/7	"	1,729,773	1232	639
K9JF/7	"	1,207,713	842	519
KO7X	"	1,161,050	992	550
KS7T	"	803,700	784	470
W7PU	"	396,664	549	358
			(OP:N7EPD)	
K7ABV	"	347,625	453	309
K7HP	"	269,010	375	294
W7PV	"	102,912	273	201
K7RR	"	91,287	242	189
N7QS	"	78,142	232	178
WC7Q	"	39,825	149	135
KF7PG	"	38,418	121	114
KB7N	"	37,884	151	123
WZ7ZR	**21**	**1,015,497**	**931**	**567**
			(OP:W7ZR)	
WA7AA	**14**	**1,007,868**	**824**	**564**
N7CW	"	58,035	164	159
WO7V	"	16,296	90	84
K7CA	**7**	**575,757**	**497**	**333**
NI5T/7	**1.8**	**192**	**13**	**12**
			(OP:N7GP)	
W7DRA	"	18	3	3
***AD7JP**	**A**	**3,795,216**	**1761**	**816**
			(OP:K2PO)	
**WJ9B/7*	*"*	*3,272,670*	*1663*	*765*
*W7CCE	"	606,285	749	405
*KC7V	"	334,305	498	323
**W7QN*	*"*	*182,776*	*399*	*248*
*W7ZI	"	153,670	284	242
**W7GF*	*"*	*142,560*	*315*	*220*
*W7WSV	"	74,817	197	163
*N6GL/7	"	74,044	238	173
*N7XY	"	64,232	173	148
*WAØWWW/7	"	54,312	198	146
*K5TRI/7	"	47,596	176	146
*W7OQ	"	34,320	163	132
*W8NOR/7	"	29,744	107	104
*K7MY	"	24,128	119	104
*AB7MP	"	22,624	126	101
*N7GOA	"	22,338	113	102
*K7ARJ	"	20,736	92	81
*NG7A	"	15,548	111	92
*K7PWL	"	10,508	79	71
*K7OX	"	9,075	82	75
*NG7O	"	6,206	69	58
*KA6JLT/7	"	2,800	48	40
*N6KW/7	"	1,472	41	32
*KX6X/7	"	820	20	20
*KM6ZT/7	"	288	22	18
*W7SST	"	180	12	12
*K7TR	"	160	11	10
*N7TMS	"	140	10	10
***W7ON**	**21**	**14,196**	**87**	**84**
*WN7Y	"	12,328	98	92
*N7LKL	"	1,716	40	33
***K7WP**	**7**	**366,275**	**417**	**299**
*KN7T	"	70,517	218	151
K8IA/7	**AA**	**6,520,106**	**2502**	**1021**
WK7S	"	4,701,762	2129	923
			(OP:K6LL)	
N9NA/7	"	2,096,691	1174	701
K7JQ	"	1,793,875	1253	635
KA6BIM/7	"	1,612,416	1017	663
KO7SS	"	1,015,920	770	498
NA2U/7	"	1,015,170	978	494
NI7R	"	987,947	706	523
WS7L	"	605,620	619	428
KI7Y	"	593,880	695	392
KX7L	"	318,478	427	323
W7VXS	"	299,238	466	318
K9DR/7	"	279,850	379	290
KE2VB/7	"	229,244	324	257
KN7K	"	200,340	354	270
W7DRM	"	184,264	304	248
WA7LNW	"	165,792	278	264

K7VIT	"	110,800	229	200
W7WHY	"	67,971	188	163
W7GT	"	25,806	124	102
K7EG	"	11,564	62	59
KR7X	"	5,170	61	55
WO7R	"	2,400	33	32
KT7G	"	816	17	17
AA7CR	21A	665,331	623	463
			(OP:K5ZM)	
NS7NN	"	35,700	123	119
			(OP:N4CC)	
NC7J	14A	2,305,750	1287	802
			(OP:W7CT)	
***W7OM**	AA	621,796	650	419
*K3WYC/7	"	185,040	295	257
*AF7S	"	102,243	255	197
**AD7ND*	"	90,428	280	188
***KE7DX**	28A	3,838	41	38
**KD7H*	21A	89,100	254	198
***AE7DW**	"	1,512	28	28
***W7VO**	7A	5,852	53	44

United States - District 8

N8BJQ	A	3,632,272	1618	791
NC8C	"	2,773,874	1353	706
			(OP:K8MR)	
K8MP	"	1,606,473	1054	601
K3JT/8	"	1,097,872	838	472
NO8DX	"	443,368	519	353
			(OP:K8MR)	
WN8R	"	378,672	480	322
W8PN	"	135,436	262	196
AG8W	"	55,042	161	146
			(OP:K8MJZ)	
K8CMO	"	46,230	165	138
W8OHT	"	9,625	80	77
N8II	21	2,450,912	1279	764
W8TOM	1.8	629	23	17
***NA8V**	A	3,894,700	1722	790
*KV8Q	"	1,833,873	1172	591
*WB8JUI	"	697,368	697	392
*WB8TLI	"	619,752	550	372
*NN8UU	"	482,148	536	354
			(OP:N8VW)	
*W8MET	"	392,730	452	318
*W8TM	"	314,398	378	238
*K7DR/8	"	206,336	343	256
*N8IVE	"	173,580	283	220
*NF8M	"	147,060	286	215
*W8IDM	"	94,350	225	185
*N8FYL	"	45,752	161	133
*NE8J	"	18,972	108	102
*NV5M/8	"	16,770	93	86
**AC8JW*	"	208	14	13
***NF8J**	21	73,040	197	176
***N8HP**	14	108,032	223	211
W8MJ	AA	2,573,424	1262	756
N6FS/8	"	1,032,575	823	515
K8MEG	"	331,867	397	307
K8AJS	"	328,230	407	315
K8BZ	"	125,454	260	203
NS8O	"	9,295	65	65
N8AGU	"	300	10	10
***W8BI**	AA	1,237,632	761	528
			(OP:KD8SAV)	
*K8BL	"	472,696	491	367
*K8GT	"	428,892	442	347
*W8JPF	"	34,959	143	129
***KG8DH**	14A	6,000	48	48
***W8EH**	7A	13,334	64	59

United States - District 9

W9RE	A	9,461,560	3097	1060
W8CAR/9	"	3,257,280	1600	754
AB9H	"	1,592,727	997	563
K9MA	"	1,510,529	944	563
W9OP	"	1,305,585	862	509
KG9N	"	87,864	199	168
W9SE	"	54,244	158	142
W9GT	"	36,295	127	119
K9EN	"	20,055	111	105
ND9C	"	5,995	57	55
			(OP:W9TC)	
K9NW	7	2,060,322	953	583
K9OM	"	191,250	251	225
KX9DX	"	15,996	130	86
***KS9K**	A	3,438,567	1605	739
			(OP:N4TZ)	
*K9QVB	"	1,809,408	1084	608
*WB9HFK	"	423,108	507	322
*NJ9R	"	311,459	461	293
*W9RF	"	188,244	313	252
*WQ9T	"	128,940	249	210
*KJ9C	"	98,940	204	204
*K9PMV	"	87,711	192	169
**N5FIW/9*	"	53,048	179	152
*KD9MS	"	51,840	147	135
*WR9Y	"	44,278	149	131
*KC9IL	"	20,503	108	101
*KU9V	"	12,283	80	71
**KCØTOT/9*	"	4,773	48	43
*WB9VKZ	"	494	19	19
*W9AKS	"	273	13	13
***KB9S**	21	25,466	119	107
***K9UIY**	7	410,343	496	313
*WO9S	"	203,642	290	233
*KEØL/9	"	8,533	57	53
WN9O	AA	1,572,003	960	551
(OP:W9IU)				
NS9I	"	1,433,161	981	557
WX9U	"	738,661	569	371
N2BJ/9	"	737,632	556	518
W9AV	"	603,339	656	389
NF9V	"	544,544	526	416
AJ9C	"	233,358	336	267
KB9NW	"	187,014	272	213
W9VA	"	164,472	267	231
AB9CD	"	86,700	189	170
AB9PN	"	78,392	184	164
KØTQ/9	"	13,260	65	65
AI9T	"	90	10	10
K9PG	"	21	3	3
W9ILY	21A	852,548	630	524
***NE9U**	AA	2,197,525	1360	671
*W9PA	"	1,717,248	925	688
*N9UA	"	1,087,083	830	477
*WT9Q	"	317,856	467	344
*WT2P/9	"	307,390	481	295
*W9QL	"	233,480	398	260
*W9VQ	"	145,800	258	225
*K9PY	"	136,740	246	212
*N9SB	"	109,395	248	195
*KA9O	"	62,212	184	151
*N9IXD	"	59,100	167	150
*WO9B	"	50,440	148	130
**N9LJX*	"	45,539	123	113
*N9BT	"	8,235	67	61
*W9LW	"	8,037	61	57
*AB9M	"	5,289	44	43
***N3EU/9**	14A	488,973	536	419
***AB9YC**	7A	329,763	361	287
*WU9D	"	2,507	23	23

United States - District Ø

K3PA/Ø	A	4,656,121	2064	911
WØETT	"	419,698	487	346
NØBUI	"	253,814	401	278
NGØT	"	236,334	309	238
WØTY	"	65,208	182	156
ABØS	"	49,680	158	144
ADØAB	"	4,268	45	44
NUØW	"	3,696	44	44
KBØEO	21	68,200	173	155
KVØQ	14	2,666,592	1453	846
***KIØI**	A	587,200	560	367
*N7WY/Ø	"	520,980	565	380
*AEØEE	"	399,798	503	342
*NAØN	"	186,003	324	249
*KØHNC	"	97,836	238	186
*WIØWA	"	78,260	236	182
			(OP:NØAC)	
*W6GMT/Ø	"	24,816	108	94
*WAØLJM	"	8,680	80	70
*KJØP	"	7,360	68	64
*NØFN	"	1,885	29	29
**KDØFW*	"	192	8	8
***KØPK**	7	366,900	395	300
KTØA	AA	2,466,952	1437	769
KCØMO	"	2,334,616	1411	694
NSØR	"	1,172,340	1041	540
KEØUI	"	766,061	667	437
K2DSW/Ø	"	731,136	572	448
K4IU/Ø	"	549,540	582	387
WØUY	"	348,660	416	298
KØHB	"	313,830	413	330
WBØN	"	311,079	399	291
KØJPL	"	137,385	249	213
KØBX	"	116,429	232	173
KV1E/Ø	"	53,721	146	141
WØGXA	14A	1,028,422	796	566
KØMD	"	949,494	804	546
***KØVBU**	AA	785,961	696	467
*NXØI	"	674,475	713	391
*NWØM	"	513,876	607	374
*KØRI	"	504,350	504	385
*KØAD	"	434,187	629	351
*KMØDX	"	369,600	461	336
			(OP:WØTT)	
*KC8R/Ø	"	344,962	477	346
*WGØM	"	281,112	391	318
*KØMPH	"	194,345	289	235
*WØYJT	"	147,660	295	230
*KØAE	"	20,097	105	99
*NØKK	"	10,833	87	69
*NOØL	"	7,089	55	51
**NGØK*	"	1,440	32	32
*KØEZW	"	216	9	8
**WØSHL*	"	27	3	3
*KØFYI	"	0	1	1
***KFØIQ**	21A	4,256	38	38

Alaska

***KL1JP**	21	180	9	9
AL9A	AA	1,340,352	876	537
WL7E	14A	2,050,524	1084	711
***WL7F**	AA	318,478	455	289
***KL2R**	14A	778,956	635	467
			(OP:N1TX)	

Bahamas

***C6AYM**	A	1,857,603	975	543
			(OP:K9GY)	

Bermuda

***VP9/DL3YM**	AA	5,348,693	2024	833

Canada

Canada - District 1

VY2TT	A	12,991,935	3567	1109
			(OP:K6LA)	
VD1M	"	5,688,300	2071	804
			(OP:VO1MP)	
VO1BQ	"	1,170,149	792	409
VE1JBC	"	473,876	488	338
***VY2ZM**	A	7,468,540	2441	887
			(OP:K1ZM)	
*VO1TTT	"	3,720,028	1606	676
			(OP:VE9AA)	
*VA1MM	"	846,706	620	394
*VO1QU	"	344,985	414	327
*VE1ANU	"	34,200	118	100
VE9BWK	AA	54,800	162	137
VE1DT	7A	817,250	431	350
**VE9OA*	AA	36,740	117	110

Canada - District 2

VA2EW	A	10,761,809	3103	1007
VE2ESU	"	13,651	80	73
***VE2AWR**	A	743,015	616	355
*K2NV/VE3	"	557,452	490	301
*VE2QV	"	69,204	167	146
VC2W	AA	10,149,300	2820	1050
			(OP:VA2WA)	
VE2FK	"	892,029	695	409
VE2EZD	"	230,146	340	238
VE2SG	"	3,008	36	32
VA2TTA	7A	290,260	263	230

Canada - District 3

VE3JM	A	9,994,960	2976	1010
VE3OI	"	1,782,664	1037	562
VA3EC	"	635,290	558	370
***VE3DZ**	A	6,096,765	2186	885
*VA3CCO	"	4,098,744	1581	754
(OP:W1UE)				
*VE3EY	"	1,186,048	795	452
*VE3FH	"	757,125	653	375
*VE3MGY	"	592,802	586	322
*VA3ATT	"	243,880	362	260
*VE3BR	"	104,994	200	171
*VE3DXK	"	94,050	179	150
*VE3ZY	"	22,742	99	83
*VA3DBT	"	16,456	85	68
*VE3RCN	"	16,046	77	71
*VE3LXL	"	6,528	54	51
*VA3FN	"	5,488	53	49
*VA3GUY	"	2,736	36	36
*VA3IK	"	2,592	34	32
***VE3OSZ**	1.8	5,880	48	35
*VE3CFK	"	4,410	43	30
VE3RZ	AA	2,867,870	1279	674
VE3UTT	"	2,697,036	1034	709
VE3EJ	"	1,048,452	781	492
VE3CX	3.5A	364,320	405	230
***VA3OB**	AA	28,028	102	91
*VE3XAT	"	1,239	22	21
***VE3IAE**	28A	4,255	42	37
***VA3DF**	7A	1,199,870	602	427

Canada - District 4

VE4SNA	21	3	1	1
***VE4YU**	A	296,803	383	289
***VE4VT**	"	132,712	237	212
			(OP:VE4EAR)	

Canada - District 5

***VE5SDH**	A	241,415	346	265
***VE5KS**	14	166,656	267	256
VE5MX	AA	3,330,519	1575	753
VE5ZX	"	170,765	252	245

Canada - District 6

***VE6EX**	A	1,020,768	945	434
VA6XDX	AA	219,356	320	244
(OP:VE6LB)				
VE6UX	14A	209,336	291	274

Canada - District 7

VE7SV	A	5,516,128	2236	892
			(OP:VE7CC)	
VA7ST	"	2,094,960	1265	602
VA7KO	"	1,751,463	1113	567
VE7JKZ	"	285,420	418	268
***VE7YU**	A	216,672	359	222
VE7XF	AA	866,692	557	557
VE7IO	"	700,878	689	398
VA7XB	"	49,250	141	125
**VA7VJ*	AA	5,217	50	47

Canada - District 8

VY1EI	28	1,029	21	21

Costa Rica

***TI2OY**	A	417,229	488	313

Cuba

***CO2RQ**	A	536,176	574	376
*CO2VE	"	53,339	177	143
***CO8LY**	21	971,598	799	498
*CO2QM	"	4,356	44	44
*CO2GL	"	2,739	33	33
***CO8CY**	14	372,855	447	335
***CO7EH**	7	1,873,745	832	499
***CO3IT**	3.5	89,131	183	119
*CO2JD	"	38,400	120	80
***T49A**	AA	2,416,960	1338	664
			(OP:CO8DM)	
*T48K	"	2,207,260	1139	635
			(OP:CO8ZZ)	

Dominican Republic

HI3TT	AA	383,640	439	345
***HI3CC**	AA	541,167	522	341

Guadeloupe

***FG8NY**	A	321,402	402	274
*FG1PP	"	24,026	92	82
*FG8OJ	"	6,210	46	45

Guatemala

***FG8NY**	A	321,402	402	274
*FG1PP	"	24,026	92	82
*FG8OJ	"	6,210	46	45

Jamaica

6Y6N	A	9,537,416	3200	1036
			(OP:DK9PY)	

Martinique

TO5Y	A	11,021,472	3359	1056
			(OP:OL5Y)	

Mexico

***XE2AU**	A	170,325	292	225
**XE1AY*	"	120,384	267	171
***XE2S**	7	743,436	515	321
**XE2AI*	"	2,912	27	28
XE2B	AA	2,487,944	1334	706
4A5XX	21A	173,880	370	230
XE2X	14A	272,718	406	278
***XE2ST**	14A	22,950	124	90

Puerto Rico

**KP3Z*	A	9,432,423	2969	1001
			(OP:NP4Z)	
***WP4X**	"	5,940,480	2404	896
			(OP:NP3A)	
NP4G	21A	202,526	329	262

St. Martin

***FS/K9EL**	A	942,720	770	480

US Virgin Islands

NP2L	A	801,804	660	436
***NP2P**	AA	4,554,564	1848	826
			(OP:N2TTA)	

AFRICA

African Italy

***IH9YMC**	3.5	384	8	8

Canary Islands

EF8U	A	14,526,876	3888	1113
			(OP:LY9Y)	
***EA8/S57K**	A	1,044,900	758	450
*EA8BQM	"	270,654	344	237
*EA8AQV	"	81,726	178	159
***EA8AVK**	28	143,655	267	183
*EA8NQ	"	19,908	91	79
***EF8C**	21	375,724	408	316
			(OP:EA8DDM)	
EA8/RA1A	AA	18,040,620	4113	1145

Cape Verde

D4C	A	18,389,025	4327	1215
			(OP:YL2KL)	
D44AC	AA	17,957,760	4277	1194
(OP:YL3DW)				

Egypt

***SU9IG**	A	1,023,984	744	468

Madagascar

***5R8SV**	A	10,679	64	59

Madeira Islands

CR3A	A	21,403,527	4598	1241
			(OP:OM3GI)	
CT9/R9DX	"	16,956,401	4004	1141
CT3EE	"	9,271,545	2877	1059
			(OP:OM3RM)	
CT3KN	21	7,064,082	2342	1017
***CT3FW**	21A	23,940	96	90

Morocco

*CN8YR	A	7,800	54	52

South Africa

***ZS2I**	A	125,496	234	189
***ZS6C**	21	7,748	52	52
ZR9C	AA	1,753,953	994	573
			(OP:ZS6WN)	
***ZS6JP**	AA	36,915	123	107

Tanzania

***5H3EE**	A	7,648,901	2765	923

The Gambia

***C56XA**	A	3,006,172	1406	676
			(OP:G3XAQ)	

Zambia

9J2HN	A	1,544,904	1006	516

ASIA

Armenia

***EK3GM**	A	1,188	22	22

Asiatic Russia

Asiatic Russia - District 9

R8CT	A	11,310,474	3315	1022
RJ9J	"	8,536,200	2851	984
RC9O	"	8,401,624	2521	1012
UA9MA	"	3,822,280	1744	748
UA9TF	"	1,497,184	1052	488
R8MD	"	796,000	628	400
RL9I	"	533,260	518	364
R9HAF	"	275,544	356	267
RM9I	21	3,243,600	1616	816
R9AE	14	665,769	600	397
RU9UC	"	39,530	129	118
RZ9YI	7	66,240	131	120
***RN9RF**	A	1,218,698	839	494
*RA9LAN	"	1,105,285	792	443
*R9QQ	"	501,930	533	338
*RT8O	"	499,443	500	357
**RW9UY*	"	443,110	505	365
*R9AB	"	270,912	300	272
*UA9NP	"	215,109	315	257
*RD9DX	"	189,810	289	222
**RU9CK*	"	166,860	239	180
*RD8O	"	121,626	208	174
*RA9YE	"	91,866	214	183
*RV9CM	"	72,027	178	151
*RA9YUI	"	67,620	170	161
*R9OA	"	48,552	138	136
*UA9CHL	"	35,112	125	114
*UA9JNT	"	34,884	112	102
*RU9YF	"	34,335	117	109
*RX9DJ	"	32,946	128	114
***R8OA**	21	998,460	749	540
*RF8R	"	623,044	564	436
			(OP:RW9RW)	
*RA9CCK	"	365,821	417	359
*RT9YA	"	258,801	353	307
*RT9YW	"	13,024	76	74
***UD8V**	14	86,848	204	184
***RX9AF**	7	776,530	432	335
RT9A	AA	9,801,115	2665	1147
R8WO	"	3,300,295	1300	697
RM9RZ	"	2,179,700	1144	710
RO9A	"	1,866,200	914	602
RW9QA	"	1,168,279	781	469
UA9AU	"	493,050	490	346
RK8I	"	447,810	477	330
RK9AX	"	271,032	375	276
UA9AGX	"	258,531	319	273
RF9C	"	219,255	289	235
			(OP:UA9CIR)	
UA9YE	"	25,382	98	98
UA9UR	"	10,080	65	63
RV9UP	28A	720,455	657	445
RW9DX	21A	2,063,733	1162	707
R8LA	"	1,580,926	1011	619
RA9UN	"	280,260	360	324
RN9A	"	220,920	307	263
UA9LAO	14A	2,937,000	1311	825
RK9QWM	"	2,511,795	1286	715
RA9Y	7A	2,315,184	858	556
R8TT	"	339,147	270	237
***RT9S**	AA	3,402,812	1403	742
*RD9CX	"	2,002,944	1100	652
*R9RT	"	1,403,264	880	608
*RZ9UO	"	1,072,000	797	500
*RC9A	"	721,237	592	379
*RA9MX	"	335,664	376	333
*R9CAC	"	220,400	309	232
*UC8I	"	147,609	271	213
			(OP:RQ9I)	
*RZ9UMA	"	81,620	193	154
*UA9OQM	"	76,360	179	166
*RW9C	"	26,117	99	91
**RK9UE*	"	25,662	99	94
**RX9SR*	"	14,118	80	78
*R9CM	"	7,344	60	51
*UA9CNX	"	559	14	13
*UA9LBQ	"	442	15	13
***UA9UKL**	21A	406,125	444	375
*UF8T	"	340,442	395	323
*UA9UX	"	59,770	155	139
*RZ9U	"	35,670	127	123
**RZ9UN*	14A	2,772	36	36
***RZ9AN**	7A	1,033,695	489	403
***RV9CX**	3.5A	6	1	1

Asiatic Russia - District Ø

UAØIDZ	A	2,549,062	1378	694
RWØBG	"	836,682	673	462
UAØOK	"	686,322	653	419
UAØKBG	"	469,200	471	368
RTØQ	"	75,570	188	165
RDØCD	"	6,716	49	46
RWØAB	"	377	13	13
RØAA	21	163,800	275	234
***RAØLQ**	A	576,568	553	388
*UAØOD	"	447,279	535	361
*UAØUV	"	373,396	487	337
*RØWC	"	281,680	393	280
*UAØAKY	"	172,134	287	219
*RØCW	"	168,495	373	239
*RAØLMK	"	95,004	255	174
*UAØLS	"	94,185	284	195
*RØCM	"	39,058	177	118
*UAØDBX	"	32,523	194	111
*RWØLCN	"	16,745	93	85
*RXØSC	"	12,716	69	68
*UAØAAS	"	420	15	15
***RØLM**	21	22,442	98	98
***RWØAJ**	14	1,515,261	890	629
RWØCN	AA	4,725,969	2170	813
RAØR	"	4,594,470	1825	870
RØQA	"	3,042,301	1500	751
RUØLL	"	1,152,885	1020	509
RAØAM	"	521,970	548	381
RAØAQQ	"	83,782	190	163
RAØSMS	"	50,619	161	141
UAØW	"	348	12	12
RWØAR	28A	88,690	201	181
RZØAF	"	24,360	99	87
RGØA	21A	2,645,894	1441	787
UCØA	"	1,314,432	916	576
RDØA	"	111,162	210	194
RKØUT	"	493	17	17
RVØC	7A	1,412,232	732	456
***RAØANO**	AA	77,700	160	150
***RAØWU**	28A	39,824	148	131
*RAØWKV	"	45	5	5
***RDØW**	21A	1,623,398	989	646
(OP:RAØW)				
**RUØA*	"	284,648	352	299
*RWØLD	"	28,184	110	104
***UAØSR**	7A	12,402	55	53

Asiatic Turkey

TC3D	A	8,180,172	2612	924
***TA7I**	A	1,984,760	1081	580
*TA2MES	"	3,136	32	32
***TA8A**	21	720	19	18
***YM3KB**	14	23,672	95	88
			(OP:TA3DJ)	
***TA3X**	AA	119,886	215	174
*TA5FA	"	60,928	153	136

Azerbaijan

***4K6FO**	A	2,981,012	1387	626
***4K9W**	AA	211,255	286	253

China

BA4TB	A	3,188,640	1599	780
BA1GN/8	"	743,886	737	442
BH4IGO	"	636,587	619	431
B4W	21	236,910	395	298
			(OP:BH4RQU)	
BD7DX	14	41,080	137	130
***BY2WL**	A	313,513	479	317
			(OP:BD2RWS)	
*BG1WNU	"	149,100	456	210
*BH3PXD	"	34,875	177	125
*BG1SZT	"	33,655	159	127
*BH4TYL	"	22,320	120	93
*BH7LSW	"	21,855	103	93
*BD7BW	"	17,177	111	89
*BG9MFY	"	12,714	97	78
*BH1MHI	"	7,080	63	60
*BG2JRW	"	4,650	58	50
*BD3MV	"	1,140	39	38
*BG2JRU	"	990	22	22
*BH4XDZ	"	800	21	20
*BH1FCC	"	273	14	13
***BH4TXN**	28	25	5	5
***BA8BA**	21	102,243	234	197
*BA1SN	"	21,049	100	97
*BG6CJR	"	6,600	58	55
*BA2BA	"	1,749	35	33
*BD3QZ	"	1,360	34	34
***BI3NAW**	14	19,055	154	103
BY5YAA	AA	2,056,905	1430	645
			(OP:BD5XX)	
BDØAAI	"	1,102,100	930	515
BH7PFH	"	482,662	688	373
BG2AUE	"	414,225	473	315
BD5FFK	"	98,880	225	192
BD1RX	"	3,010	35	35
BG8NUD	21A	1,055,920	819	536
BD7LMD	14A	239,685	369	285
BD3MH	7A	245,784	297	228
BA4SI	"	25,520	84	80
***BA7IO**	AA	2,087,498	1267	686
*BD8NBG	"	539,791	636	413
*BG4HJE	"	369,660	622	305
*BG3SSA	"	299,565	481	317
*BG2CTX	"	152,750	291	235
*BG9XD/5	"	152,012	312	244
*BG4GOV	"	116,400	276	194
*BG6LQV	"	99,484	231	187
*BH4PVP	"	95,550	254	195
*BH3PTL	"	89,820	277	180
*BG5JND	"	74,196	195	162
*BG6LQZ	"	69,472	203	167
*BG3OJZ	"	48,865	189	145
*BD1RCR	"	38,776	142	131
*BH1KVZ	"	33,744	121	111
*BG4OGO	"	28,865	149	115
*B4/DF9LJ	"	16,598	96	86
*BH4SQE	"	15,300	118	85
*BGØARE	"	6,500	54	52
*BD5XM	"	2,600	47	40
*BH3COZ	"	1,600	41	32
*BH8ASZ	"	651	24	21
*BD6AHU	"	294	15	14
*BH4SKP	"	276	12	12
*BG3UPA	"	240	12	12
*BD1IIJ	"	27	3	3
***BD8SZ**	21A	764,218	685	442
*BH4TVU	"	25,758	121	106
*BG4TRN	"	8,073	70	69
***BG3FB**	7A	2,805	45	33

Cyprus

P37F	A	6,804,415	2324	835
			(OP:5B4AGN)	

C4Z	21	4,562,616	1850	906
			(OP:5B4AIZ)	
*5B/RN3QO	A	7,720,488	2587	837

Georgia

4L8A	21	6,681,246	2420	1014
*4L3T	A	2,192,256	1101	576

Hong Kong

VR2CO	A	1,026,599	966	511
VR2XAN	AA	43,264	128	128

India

VU2CVS	A	529,659	525	351
VU2PTT	"	435,160	462	344
VU2JOS	14	3,910	49	46
*VU2MUD	21	27,832	105	98
*VU3KPL	AA	454,944	479	336
*VU2ABS	"	22,270	91	85
*VU2JXL	"	5,535	56	45

Israel

4Z5PJ	A	1,863	27	27
4Z5KO	7	10,234	47	43
*4Z5FW	A	6,380	65	58
4XØA	28A	185,261	293	229
			(OP:4X1VF)	
4X7R	21A	7,187,136	2417	1056
			(OP:4X6FR)	
4Z5LY	14A	877,825	706	481
*4Z5TK	AA	153,300	246	210
*4ZØDX	14A	2,263,446	1149	738

Japan – District 1

JH1GBZ	A	5,915,728	2228	884
			(OP:JH5GHM)	
JH1FNU	"	378,252	452	342
JA1AYO	"	329,220	427	295
JA1DCK	"	175,187	311	239
JQ1ABC	"	147,976	259	212
JH1HIC	"	109,804	236	194
JA1EPJ	"	78,554	200	181
JF1LMB	"	77,922	204	162
JO1SIM	"	66,234	219	166
JA1HMK	"	55,902	142	121
JA1IXY	"	32,129	97	89
JL1DLQ	"	19,314	89	87
JR1IJV	"	12,426	61	57
JG1ITH	"	9,240	61	60
JA1TMG	"	6,480	50	45
JL1LNC	"	2,784	37	32
JA1WWO	"	768	17	16
JI1DSU	"	578	17	17
JF1KML	21	165,085	267	241
JF1UOX	"	28,560	113	102
JA1UOA	"	26,180	114	110
JA1BBC	3.5	450	16	15
*JA1BJI	A	2,472,932	1358	682
*JI1RXQ	"	2,424,906	1235	662
*JE1SGH	"	478,564	541	362
*JA1CP	"	253,510	416	251
*JA1CJP	"	218,008	310	229
*JF1WNT	"	173,475	284	225
*JA1SCE	"	155,262	295	226
*JR1EMT	"	138,567	271	221
*JA1AZR	"	111,265	253	187
*JJ1KZZ	"	99,416	198	172
*JA1RKI	"	92,412	211	153
*JF1KWG	"	91,767	220	181
*JG1AVR	"	89,170	222	185
*7N2SPK	"	69,204	188	146
*JI1VAH	"	65,484	192	153
*JN1MSO	"	41,623	123	107
*JA1IE	"	39,750	139	106
*7M1MCY	"	37,026	116	99
*7N4ITA	"	34,770	121	114
*JA1DKU	"	30,495	121	107
*JA1TBX	"	24,564	115	92
*JG1SWV	"	21,390	93	93
*JH1JNJ	"	15,170	80	74
*JH1BCS	"	9,308	56	52
*7L3DGP	"	8,568	66	63
*JH1XUP	"	7,020	56	52
*JA1CRJ	"	6,072	48	46
*JE1GZB	"	4,888	62	52
*JF1TEU	"	1,863	27	27
*JA1STY	"	840	19	21
*JA1ANF	"	693	21	21
*JH1AHU	"	570	20	19
*JH1SGG	"	207	8	9
*JN1BBO	"	65	5	5
*JQ1PCT	"	55	5	5
*JI1HFJ	28	4,368	57	48
*JP1IXV	21	340,692	390	348
*JE1RRK	"	120,482	234	214
*JR1MEG/1	"	102,555	234	215
*JF1GZZ	"	73,684	186	169
*JI1BBN	"	53,130	149	138
*7K1EQG	"	22,989	97	97
*JE1HTV	"	9,044	75	68
*JQ1COB	"	8,792	57	56
*JA1VDJ	"	7,535	57	55
*JF1AZQ	"	7,011	61	57
*JH1EYM	"	4,578	45	42
*JA1MZM	"	4,545	48	45
*7M2ALZ	"	4,136	48	47
*JI1LAI	"	1,440	24	24
*JJ1XQU	"	1,296	28	27
*JH1CFV	"	855	19	19
*JK1LUY	"	280	10	10
*JK1NSR	"	252	10	9
*JO1WIZ	"	21	3	3
*JA1KEV	14	9,246	72	67
*JN1JYD	7	3,672	27	27
*JA1GQC	"	1,480	20	20
*JF1OPO	"	91	8	7
*JE1SPY	1.8	182	15	14
JH1FSF	AA	681,919	636	427
JJ1NYH	"	510,900	467	393
JE1LFX	"	412,778	470	346
JI1AVY	"	384,146	432	322
JH1RFM	"	320,542	404	293
JE1NVD	"	265,234	401	269
7N4SJX	"	206,780	284	196
JH1CTV	"	198,825	329	241
JH1OAI	"	146,790	252	210
JH1OVY	"	142,738	245	214
JI1LAT	"	102,480	212	183
JH1NXU	"	77,900	213	164
JG1LFR	"	45,076	124	118
JA1DKT	"	43,010	139	115
JA1XUY	"	1,904	41	34
JA1BPA	28A	13,104	82	78
JH1ACA	21A	226,226	320	286
JS1KQQ	"	408	12	12
JH1APK	14A	243	9	9
*JH1EAQ	AA	2,059,368	1119	636
*JS1KKY	"	669,496	574	424
*JA1BNW	"	357,811	432	331
*JR1MEU	"	161,102	268	218
*JG1RZH	"	155,942	277	206
*JA1OHP	"	48,262	143	118
*JH1GBO	"	31,392	116	109
*JJ1WWL/1	"	15,466	77	74
*JG1LPL	"	9,380	78	67
*JP1LRT	"	8,083	63	59
*7N4KQM	"	4,095	48	39
*7L4IOU	"	297	11	11
*JA1LKY	"	4	2	2
*JG1AVO	28A	97,909	283	197
*JK1FZR	"	120	10	10
*7K4QOK	21A	436,946	465	394
*JN1ECL	"	3,854	42	41
*JK1FUP	"	1,881	37	33
*JH1EYS	"	414	21	23
*JI1BDQ	"	360	12	12
*7K4VPV	14A	174,317	285	253
*JG1VHA	"	1	1	1
*JG1FKT	7A	63,888	150	121

Japan - District 2

JR2PMT	A	1,136,982	821	506
JA2VHO	"	534,144	551	384
JA2XYO	"	455,571	478	359
JA2KPW	"	72,300	204	150
JF2JFP	"	29,973	124	103
JR2LHM	"	28,860	126	111
JR2PAU	"	12,784	70	68
JR2IOB	21	1,423,670	949	590
JA2CPD	"	768	16	16
JF2OHQ	14	2,310	30	30
JA2HNP	7	185,843	212	191
*JA2QVP	A	230,740	366	278
*JA2GHP	"	54,990	202	141
*JG2RFJ	"	28,356	111	102
*JR2NTC	"	21,252	99	92
*JS2KHM	"	20,436	96	78
*JR2BEI	"	12,180	65	60
*JL2OGZ/2	"	112	8	7
*JG2QUM	"	0	9	9
*JL2XMW	28	2,112	37	32
*JE1ALA/2	"	672	26	21
*JA2KKA	21	115,154	227	206
*JA2HYD	"	35,816	135	121
*JA2BQX	"	30,360	120	120
*JH2MYN	"	6,936	51	51
*JK2VQR	"	6,710	56	55
*JR2MIO/2	"	3,652	49	44
*JR2AAN/2	"	748	17	17
*JR2SCJ	7	623,713	454	323
*JE2BOM	"	30,186	98	86
*JA2HJP	"	12,366	55	54
*JF2FIU	"	6,006	43	42
*JI2GZC	"	2,346	25	23
*JE2CPI	3.5	2	1	1
JF2OZH	AA	726,700	638	430
JA2AXB	"	239,040	332	249
JF2IWL	"	58,630	174	130
JA2FSM	21A	16,728	83	82
JJ2RON	"	216	10	9
JR2WLQ	14A	38,252	152	131
JF2XGF	"	2,790	32	31
*JR2NMJ	AA	344,925	421	315
*JG2RZF	"	91,560	229	168
*JR2AWS	"	18,408	91	78
*JA2KVB	21A	1,168,398	777	594
*JF2KWM	"	7,920	64	60
*JA2HBK	"	1,008	22	21
*JE2VYM	14A	9,724	70	68
*JA2PFO	7A	37,534	110	98

Japan - District 3

JR3BOT	A	658,788	636	412
JA3VOV	"	248,970	380	258
JA3ENN	"	207,983	340	241
JA3AVO	"	202,011	321	233
JN3QNG	"	22,600	114	100
JG3KMT	"	7,040	62	55
8J3KGR	"	3,900	46	39
			(OP:JH3HGI)	
JS3LSQ	"	1,656	27	24
JP3AYQ	21	332,282	462	337
JA3DAY	14	113,098	218	193
*JA3JM	A	329,180	454	302
*JE3EDJ	"	317,226	391	294
*JA3IBU	"	261,690	380	286
*JK3HLP	"	239,652	373	252
*JN3TSY	"	136,656	260	208
*JH3WKE	"	112,132	243	194
*JA3JND	"	76,960	186	160
*JE3CXJ	"	72,000	217	150
*JR3RIU	"	49,200	143	120
*JA3EBT	"	48,374	180	134
*JO3QVT	"	48,195	171	119
*JH3BYX	"	28,527	134	111
*JH3PTC	"	17,400	110	75
*JR3NDM	"	6,270	60	55
*JO3XCK	"	1,480	25	20
*JG3LDD	"	252	12	12
*JE3GNN	"	0	1	1
*JA3RAZ	28	1,674	32	31
*JA3UWB	21	147,224	266	239
*JG3SVP	"	96,068	221	188
*JH4PUL/3	"	48,077	138	131
*JH3CUL	"	10,488	70	69
*JA3EGE	"	2,059	29	29
*JA3POW	"	990	22	22
*JR3KAH	"	768	27	24
*JF3IYW	14	143,520	277	240
*JO3PSJ	"	100,360	210	193
*JA3MIB	"	57,528	163	153
*JI3BFC/3	"	28,710	131	110
*JE3UHV	"	20,330	102	95
JS3CTQ	AA	6,771,848	2311	986
JN3SAC	"	1,112,217	817	519
JH3EQP	"	66,360	193	158
JL3RDC	"	16,776	93	72
JN3TMW	"	8,476	61	52
JK3NSD	"	2,697	32	29
JH3AIU	21A	1,286,940	904	534
JF3LOP	3.5A	6,210	60	46
*JF3NKA	AA	1,059,821	846	503
*JL3MCM	"	684,084	603	436
*JG1EIQ/3	"	243,000	361	270
*JA4XHF/3	"	143,080	238	196
*JE6EKC/3	"	28,644	103	93
*JF3GFH	"	11,679	58	51
*JI3QGQ	"	1,675	25	25
*JI3KDH	28A	209	11	11
*JG3FEA	21A	410,673	407	367
*JI3FSI	"	29,104	113	107
*JA3EJG	"	55	5	5
*JR3VZS	"	20	5	5

Japan - District 4

JH4UYB	A	6,968,577	2510	933
JA4DPL	"	252,672	376	282
JA4CMW	"	96,579	226	189
JH4RUF	"	13,065	73	65
JM4WUZ	28	30,380	150	124
*JE4MHL	A	916,204	767	452
*JE4URN	"	52,704	180	144
*JA4GQD	"	10,800	74	60
*JR4GPA	21	520,201	534	361
*JI4WHS	"	110,142	232	211
*JA4DWG	"	26,675	103	97
*JA4TUJ	"	17,630	86	86
*JH4FUF	"	11,858	83	77
*JA4RQO	"	1,764	40	36
*JH1MTR/4	14	8,850	60	59
*JA4AVO	7	126	6	6
JO4CFV	AA	205,829	305	223
JN4MMO	14A	2,255,117	1194	701
*JH4PHW	AA	15,840	99	90
*JA4AQR	21A	19,068	85	84
*JR4VEV	3.5A	6	1	1

Japan - District 5

JI5NWQ	A	156,780	287	234
JE5JHZ	"	31,212	111	102
JA5NSR	14	274,482	353	306
*JJ5HUD	A	453,871	518	341
*JG5DHX	"	437,524	525	356
*JA5IVG/5	"	8,642	64	58
*JR4CZM/5	21	46,332	142	132
*JA5FOP	"	378	15	14
*JA5CBU	7	6,860	35	35
JA5FBZ	28A	68,600	200	175
JH5MXB	21A	23,220	94	90

Japan - District 6

JA6LCJ	A	1,361,483	1016	547
JA6AVT	"	270,230	441	305
JA6CDC	"	8	2	2
*JA6WFM	A	1,558,984	1118	574
*JA6CVR	"	100,274	268	181
*JA6RIL	"	288	15	12
*JH6WHN	28	72,210	239	174
*JH6SCA	"	294	15	14
*JA6MQY	21	18,414	99	93
*JE6TUP	14	14,964	92	86
JA6BZI	AA	1,304,147	820	559
JA6SRB	"	318,155	394	323
JR6CSY	"	118,440	275	210
JE6HID	"	48	4	4
JE6JAO	21A	864	18	18
*JG6JAV	AA	604,296	619	396
*JA6FFK	"	492,448	522	352
*JH6QIL	"	271,035	457	285
*JF6RIM	14A	212,895	344	285

Japan - District 7

JA7IC	A	1,931,904	1159	624
JA7BME	"	1,842,834	1059	623
JA7AUM	"	67,452	155	146
JA7NVF	21	1,933,568	1148	664
JR7RZK	"	126,900	249	225
JA7ETU	"	1,566	27	27
*JH7IXX	A	87,606	248	157
*JA7MWC	"	39,294	160	118
*JR7ASO	"	2,720	38	34
*JE7PNN	"	1,206	20	18
*JN7KRH	"	986	29	29
*JR7DUT	"	352	20	16
*JI7JIH	"	77	7	7
*JE7HYK	21	295,200	374	328
*JA7VEI	"	118,230	227	210
*JH7RTQ	"	14,350	75	70
*JF7GDF	14	10,010	80	65
*JI7OED/7	"	16	4	4
*JO7GVC	7	500	10	10
JA7GYP	AA	121,680	219	195
JG7PSJ	"	112,908	216	194
JO7KMB	7A	148,607	229	173
*JF7PHE	AA	443,880	492	360
*JAØVTK/7	"	60,048	165	139
*JH8CLC/7	"	2	2	1
*JR7IWC	21A	79,476	200	179
*JA7ZP	"	1,058	23	23
*JA7RQK	14A	16,766	88	83

Japan - District 8

JH8DBJ	14	645	15	15
*JA8AJE	A	25,800	95	86
*JE8KKX	"	20,560	102	80
*JK8PBO	28	384	16	16
JH8CXW	21A	32,148	120	114
JH8GEU	14A	69,552	178	168
*JG8IBY	AA	9,246	100	69
*JI8XBG	"	5,100	61	50
*JL8WFI	14A	29,832	133	113

Japan - District 9

JF9JTS	A	337,804	435	316
JA9CWJ	14	1,303,588	823	583
JA9FHB	3.5	1,064	14	14
*JA9EJG	21	133	7	7
JR9GMS	AA	901	19	17
JH9DRL	14A	60	5	5

Japan - District Ø

JAØIOF	A	172,002	304	218
JJØPJD	"	121,730	238	185
JRØGVW	21	2,442	38	37
*JHØNEC	A	225,389	313	257
*JAØBJY	"	17,550	80	75
*JRØGXA	"	2,190	30	30
*JHØEPI	14	278,700	381	300
*JK2EIJ/Ø	7	73,114	228	139
*JRØBQD	"	25,232	86	76
JHØINP	AA	3,753,140	1707	820
JJØJML	"	53,940	192	155
JAØGCY	21A	29,810	111	110
*JAØGSG	7A	110	10	10

Jordan

JY9FC	21A	7,516,880	2616	1085

Kazakhstan

UPØL	A	12,403,110	3599	1090
			(OP:UN9LW)	
UN7FW	"	569,821	563	401
UN7QF	"	3,256	38	37
UN9GD	21	4,953,570	1946	978
UN3M	"	92,253	208	161
UP2L	7	3,239,991	1036	601
			(OP:UN4L)	
UN8GA	"	79,135	138	119
*UN7CAD	A	328,994	371	271
*UNØC	"	3,456	39	32
*UP6P	28	194,544	312	252
*UN3Z	"	17,381	97	91
*UN6G	21	953,344	753	532
*UN6LN	"	664,216	640	409
*UN7CN	"	160,080	266	232
*UP2F	"	25,641	100	99
			(OP:UN8FM)	
UN5J	28A	18,792	94	87
UN4PG	21A	1,888,128	1112	704
*UN8PT	AA	504,660	495	390
*UN4PD	"	248,952	357	264
*UN9LU	3.5A	165,546	190	153

Kyrgyzstan

*EX8BN	A	244,212	351	282

Laos

XW1IC	A	5,567,795	2407	895
			(OP:E21EIC)	

Mongolia

JV15ØITU	A	18,321	101	93
			(OP:JT1CD)	
*JU1WP	A	154,784	308	224

Nepal

*9N7CW	14	540	15	15
			(OP:F2CW)	

Qatar

A71AE	28	7,722	57	54
A71MM	14	2,175	29	29
A71EM	21A	2,657,682	1425	722

Republic of Korea

DS4EOI/2	A	4,014,656	1881	842
HL1VAU/4	"	3,393,597	1826	769
*DS5VTG	A	66,360	179	140
*HL2VXK	21	72,275	272	175
*HL5JCB	"	16,426	90	86
DS5DNO	AA	1,433,112	1065	566
HL4CEL	"	27,378	215	117
HL5YI	21A	31,360	117	112
*HL2CFY	AA	83,296	174	152

Saudi Arabia

7Z1SJ	A	6,221,492	2085	886
7Z1JA	"	2,315,304	1249	648
			(OP:KE5JA)	
*7Z1HL	A	2,064,204	1151	621
*HZ1FI	3.5	114,140	152	130
			(OP:DL2RMC)	

Singapore

*9V5ØJA	A	29,400	126	98
			(OP:9V1JA)	
*9V5ØXX	21A	769,571	702	473
			(OP:9V1XX)	

Taiwan

BX4AG	A	78,848	270	176
*BX6AD	AA	16,380	89	90
*BU2CA	21A	4	2	2

Thailand

HSØZDY	A	518,994	526	378
HSØZLM	"	95,321	285	199
HSØZDR	21	11,696	70	68
*E29BUQ	A	1,016,235	899	495
*HS3LSE	"	101,742	269	186
*HS8JWH	"	1,566	27	27
*HS3ANP	28	55,784	200	152
*HS3NPH	"	4	2	2
E21YDP	AA	1,647,200	1098	580
HS5NMF	"	199,136	354	254
HS4DDQ	21A	412,911	547	373
*E2ØPFE	21A	145,236	290	228
*HS8JYX	"	76,544	197	184

United Arab Emirates

A65BP	A	10,518,550	3379	1025
*A65CB	14	96,288	204	177
A65CA	AA	1,965,625	1152	629

Vietnam

*XV9NPS	21	505,206	529	381
*XV4Y	AA	219,042	341	258

West Malaysia

9M2TO	AA	911,397	793	461
*9M2PAT	AA	2,178	41	33
*9M2/JE1SCJ	14A	178,035	312	249

EUROPE

Albania

*ZA/OU2I	A	1,229,400	1225	600
			(OP:OZ1BII)	
ZA1G	AA	57,798	197	169

Austria

OE3K	A	9,830,217	3510	1097
			(OP:OM3BH)	
OE5OHO	"	1,054,458	1035	566
*OE1CIW	A	368,344	487	328
*OE9WGI	"	267,300	434	330
*OE1GOA	"	46,976	165	128
*OE1TKW	"	44,730	155	142
*OE1H	"	3,680	41	40
			(OP:OE1TKW)	
*OE5HIL	"	1,836	27	27
OE2S	AA	2,958,375	1582	875
			(OP:OE2VEL)	
OE2LCM	"	1,079,630	948	535
*OE1HXS	AA	780	20	20

Azores

CU4DX	A	10,391,556	3887	1149
			(OP:K1ZZ)	
CU2KG	21	4,843,432	2419	1012
			(OP:OH2BH)	
CR2X	14	6,869,928	2970	1164
			(OP:OH2PM)	

Balearic Islands

EA6VQ	AA	866,090	947	514
EA6URA	21A	4,276,142	2122	1009
			(OP:EA3AIR)	

Belarus

EW2A	A	6,170,109	2582	1033
EW3LN	"	1,622,752	1181	608
EW8OM	"	1,055,360	1034	544
EW6EN	"	844,725	858	525
EW2BO	28	124,800	307	240
EW8W	21	8,418	68	61
EW8DX	3.5	461,890	584	374
EU3AA	1.8	1,458	28	27
*EV6Z	A	1,391,500	1167	605
*EU6AA	"	568,096	705	433
*EW4EW	"	169,858	344	278
*EU2EU	"	169,418	315	254
*EW1DO	"	21,014	104	79
*EW7DK	"	17,113	113	109
*EW2EO	"	6,432	71	67
*EU4BF	"	1,000	20	20
*EU1AA	28	285,324	507	354
*EW6AF	21	660,513	692	497
*EW1TO	"	276,528	414	336
*EU6DX	14	1,044,204	895	651
*EW2ES	"	98,010	275	242
*EW6FW	"	32,340	143	132
*EW8OG	"	24,523	152	137
*EU3NA	7	558,792	535	398
*EU1U	3.5	226,498	400	269
EU1A	AA	6,892,600	2646	1100
EV1R	"	5,062,824	2202	1053
EU5C	"	3,306,478	1770	826
			(OP:EW1HI)	
EU6AF	"	2,224,335	1321	771
EU4AA	3.5A	917,088	846	492
*EW1IP	AA	518,748	581	417
*EW1NA	"	272,800	485	341
*EU4CQ	"	210,256	316	272
*EW4DX	21A	135,561	247	219
*EW1FM	"	99,450	240	221
*EW6GF	14A	634,359	769	517
*EW8OF	7A	816,398	694	473

Belgium

*OR2F	A	5,022,711	2262	939
			(OP:ON8LDS)	
*ON3ND	"	1,605,888	1234	612
*OP7B	"	1,138,627	980	553
*ON5WL	"	161,250	359	258
*ON2AD	"	33,411	160	129
*ON5SV	21	127,743	269	237
*ON6NA	7	126,096	267	222
OQ5M	AA	3,747,625	1892	875
			(OP:ON5ZO)	
ON6NL	"	1,258,155	987	657
OR3A	"	944,195	832	509
OT6M	28A	270,456	467	354
			(OP:ON9CC)	
*ON7VD	AA	603,581	538	407
*ON6FC	"	10,500	79	70
*ON7PX	"	5,766	63	62
*ON5JT	14A	678,240	806	540

Bosnia-Herzegovina

E7DX	A	10,609,068	3669	1178
			(OP:E77DX)	
E74X	"	947,648	948	536
E77W	"	588,744	590	408
E77A	28	961,170	1054	597
E73W	21	5,115,264	2322	1038
E7ØR	1.8	185,750	366	250
*E71EEE	28	233,160	534	335
			(OP:E77G)	
*E71W	"	9,815	74	65
*E79D	7	1,529,280	935	590
*E75A	1.8	53,193	185	149
E73ESP	1.8A	80,272	237	173
			(OP:E76AA)	
*E77AW	AA	1,702,856	1368	659

Bulgaria

LZ1GE	A	375,858	563	399
LZ1HW	"	62,920	159	130
*LZ8E	A	7,257,362	3003	1057
			(OP:LZ2BE)	
*LZ1FJ	"	139,776	328	256
*LZ5IL	"	91,065	216	195
*LZ8Z	"	62,524	244	196
			(OP:LZ2HT)	
*LZ1ZU	"	34,185	150	129
*LZ1IA	28	43,194	161	138
*LZ2JA	"	36,300	147	132
*LZ2TF	"	1,204	31	28
*LZ9V	21	439,052	550	436
*LZ1DQ	"	286,416	442	351
*LZ112RF	"	60,040	186	152
			(OP:LZ1YE)	
*LZ2JE	"	3	1	1
*LZ2HR	14	722,988	936	532
*LZ1OJ	"	134,808	313	274
*LZ2CH	"	59,136	216	192
*LZ73TRC	"	55,272	189	168
			(OP:LZ1YE)	
*LZ2FM	"	44,275	169	161
*LZ1MC	"	987	23	21
LZ3ZZ	AA	2,141,100	1495	732
LZ2JR	"	1,582,272	929	576
LZ1IKY	"	562,464	671	434
LZ7M	"	4,816	59	56
LZ1NG	28A	571,152	787	489
LZ3A	"	311,170	589	370
			(OP:LZ3CQ)	
LZ2Ø15KM	14A	77,106	277	213
LZ1EV	7A	2,576,728	1242	658
LZ5VV	3.5A	8,308	69	62
LZ2ZG	1.8A	738	21	18
*LZ4T	AA	3,650,568	1853	888
*LZ9R	"	1,153,404	1029	597
*LZ1VQ	"	303,297	433	313
*LZ2RM	"	9,455	64	61
*LZØM	"	4,620	47	44
			(OP:LZ2SX)	
*LZ1ZP	21A	14,145	69	69
*LZ1QV	7A	443,846	419	397

Crete

SV9GPV	A	78,310	252	205

SV9COL	21	323,635	444	383
*SV9/R2DX	21	200	10	10

Croatia

9A2AJ	A	4,618,880	2108	896
*9A/S52A	A	1,763,838	1255	654
				(OP:S59AA)
*9A2EY	"	233,916	417	303
*9A2BD	"	183,662	388	262
*9A3LN	"	171,864	323	279
*9A4W	"	83,200	285	208
*9A/DF7DR	"	68,068	214	187
*9A2KO	28	1,798	33	31
*9A1AKL	14	513	19	19
				(OP:9A3NU)
*9A5V	7	209,198	361	257
*9A4QV	3.5	276,168	461	296
9A73A	AA	9,793,025	3116	1195
				(OP:9A1UN)
9A5K	"	7,245,784	2893	1076
9A3XV	"	662,025	636	455
9A4M	"	211,255	378	253
9A2KD	"	152,382	329	218
9A2NO	21A	306,372	415	363
9A4WY	7A	2,760,896	1260	716
9A9R	"	2,569,829	1226	691
9A2G	1.8A	4,841	50	47
*9A7DX	AA	3,089,268	1514	828
*9A5ST	"	876,808	907	508
*9A8W	"	741,285	707	513
*9A3NC	"	9,639	69	63
*9A3TY	14A	674,883	743	561
*9A3JH	7A	2,046,195	1022	659
*9A4MX	"	1,452,672	801	576
				(OP:DJ2MX)
*9A1AA	"	1,107,574	774	533

Czech Republic

OK2QA	A	1,279,312	992	592
OK2SFP	"	361,938	514	358
OK1BLU	"	286,300	462	350
OK1DXW	"	46,659	170	151
OK2EQ	28	31,878	137	126
OK2ABU	"	10,780	75	70
OK7XC	21	245,072	385	289
OK1KA	"	218,950	364	302
OL1M	7	2,035,040	1177	632
				(OP:OK1EW)
OL7P	3.5	657,189	721	411
*OK7Z	A	5,598,537	2386	951
				(OP:OK2ZI)
*OK7Y	"	2,892,552	1687	762
				(OP:OK1FDY)
*OK2MBP	"	1,873,361	1322	679
*OK7AW	"	1,598,260	1279	628
*OK1JOC	"	1,561,770	1207	630
*OK1HFP	"	1,251,432	1116	573
*OK2QX	"	989,520	878	570
*OK1HEH	"	758,142	834	462
*OK2TBC	"	630,192	693	456
*OK1FCA	"	618,800	742	442
*OK2EC	"	613,313	676	431
*OK1BA	"	591,888	722	456
*OK1HCG	"	507,520	664	416
*OK1PX	"	325,424	442	344
*OK2BND	"	288,840	473	332
*OK1DVA	"	246,772	494	323
*OK2SGY	"	239,989	430	323
*OK2BJK	"	229,330	444	323
*OK2SSJ	"	205,205	398	287
*OK1DDQ	"	111,494	273	214
*OK1ANP	"	45,150	172	150
*OK1PFM	"	30,160	139	116
*OK2SWD	"	20,227	125	113
*OK2PBG	"	10,579	81	71
*OL8M	"	7,935	69	69
*OK1DRX	"	2,196	37	36
*OK2BNF	28	30,360	137	120
*OK1TD	21	516,256	543	442
*OK2BUT	"	331,111	408	341
*OK6N	"	207,320	336	284
*OK1ACF	14	165,165	306	273
*OK1KZ	"	23,256	108	102
*OK3MO	"	17,576	120	104
*OK1FRO	"	16,478	118	107
*OK1RZ	7	1,178,502	837	521
*OK1CZ	"	424,580	525	355
*OK2BRS	"	360,786	424	314
*OK1DM	"	72,206	188	158
*OK2BRQ	"	62,930	207	155
*OK1AOU	"	38,199	134	119
*OK2HBR	3.5	342,486	509	318
*OK1JOK	1.8	54,096	194	147
OK2SG	AA	286,368	331	304
OL8R	"	94,392	246	207
				(OP:OK1FCJ)
OK6DJ	"	9,656	71	68
OL5T	21A	2,803,110	1478	838
				(OP:OK1MV)
OK3C	"	1,883,664	1134	762
				(OP:OK2ZC)
OK1DG	"	1,372,344	976	633
OL6P	14A	4,694,040	2177	1062
				(OP:OK2PP)
OL3R	"	3,378,460	1664	1004
				(OP:OK1VWK)
OK1DX	3.5A	176,056	293	236
*OK5ZZ	AA	1,934,676	1154	732
*OK1WWJ	"	973,125	947	519
*OK7MT	"	835,635	743	493
*OK6AA	"	90,240	225	188
*OK2SAR	"	70,092	220	177
*OK4FX	"	53,874	168	146
*OL9R	14A	2,602,986	1438	926
				(OP:OK6RA)
*OK1FGD	"	482,411	675	467
*OK2PCL	"	133,672	237	196
*OK2BFN	7A	1,737,995	933	635
*OK1AY	"	1,215,279	628	611

Denmark

OZ7RQ	A	1,885,345	1286	649
OZ6TL	"	434,684	648	401
OZ7EA	"	370,944	503	384
OZ8SW	"	280,830	495	345
OU4N	"	263,406	415	307
OZ6AGX	"	259,164	416	313
OZ8PG	"	114,716	284	238
OZ2TF	3.5	269,206	436	287
*OV3X	A	1,831,206	1204	663
				(OP:OZ8AE)
*OZ2U	"	1,199,534	879	658
*OZ1AAR	"	735,840	702	511
*OZ1IVA	"	157,344	407	264
*OZ3SM	"	100,188	220	198
*OZ1DGQ	"	6,363	69	63
*OZ1THC	"	3,750	55	50
*OZ7BQ	14	205,075	395	325
*OZ1NF	7	107,115	218	185
OZ8AGB	AA	90	9	9
*OZ4CG	AA	1,574,856	1231	621
*OU4O	"	40,698	153	133
				(OP:OZ4O)
*OZ7HB	7A	92,910	237	190

Dodecanses

*SV5/DL3DRN	A	517,540	780	452

England

G9W	A	9,632,154	3192	1106
				(OP:MØDXR)
G2F	"	6,401,803	2768	971
				(OP:G4MKP)
G4A	"	5,705,370	2448	918
				(OP:G4TSH)
G4SGI	"	342,051	522	339
MXØIRN	"	118,080	335	240
				(OP:G4IRN)
G4HZV	"	71,925	191	175
M3C	21	59,204	173	164
				(OP:GØVQR)
G3VYI	14	134,235	330	285
M3W	7	3,284,715	1445	735
				(OP:G4FAL)
*M7Q	A	3,481,398	1935	807
				(OP:G4PIQ)
*G3RFH	"	671,790	855	490
*GØHVQ	"	483,475	631	415
*G4DDL	"	446,854	642	373
*MØRYB	"	260,331	471	321
*G3RSD	"	244,200	389	275
*G3RLE	"	208,088	397	296
*GØOOR	"	207,408	394	298
*G6NUM	"	200,554	407	298
*G3OOU	"	132,791	318	241
*GØJSP	"	61,030	202	170
*G2HDR	"	26,400	148	132
*G3ZRJ	"	25,440	126	106
*MØMPM	"	20,905	120	113
*G4OGB	"	14,208	104	96
*MØDSL	"	12,400	114	100
*G3XHB	"	2,714	46	46
*G3GLL	21	40,664	145	136
*G4C	14	152,110	368	287
*G3ZGC	7	393,435	417	315
*G4HVC	"	312,090	468	303
*GØT	"	102,185	248	191
*G3TJE	3.5	41,856	148	128
M2X	AA	4,947,172	2269	967
				(OP:G3VMW)
G3TXF	"	3,284,346	1404	1027
G4R	"	3,140,800	1801	832
				(OP:YO4RDW)
MØINN	"	2,174,130	1281	735
G4E	"	910,314	844	491
				(OP:G4BUE)
MØTDW	"	352,506	511	327
G3VGZ	"	227,610	395	281
GØSYP	"	102,180	230	195
G4RRM	"	56,049	183	157
G6VMR	"	4,940	55	52
M3I	21A	1,898,124	1151	734
				(OP:GØORH)
M7O	"	640,611	698	477
				(OP:MØVKY)
G4AFJ	"	18	3	3
G3PHO	7A	128,843	214	187
*G4WGE	AA	197,626	424	286
*MØJWB	"	196,308	395	266
*G3RTU	"	115,948	266	202
*G6M	"	23,345	129	115
				(OP:G4BYG)
*MØVFC	"	19,291	108	101
*M6IDO	"	13,706	107	89
*2E1FVS	28A	17,108	106	91
*G3KNU	21A	91,938	214	199
*G4U	14A	1,112,184	1004	684
				(OP:G4SGX)
*G9V	"	1,003,520	1010	640
				(OP:MØPCB)
*M6W	7A	2,018,016	1103	637
				(OP:G3WW)
*G1N	"	1,078,925	737	515
				(OP:G3MZV)
*2EØCVN	"	285,175	404	305
*M7T	3.5A	29,367	120	117
				(OP:G3YYD)

Estonia

*ES7GM	A	3,996,720	2211	936
*ES6DO	"	62,291	193	167
*ES8DH	"	33,669	138	129
*ES4MM	21	1,755	27	27
ES2EZ	21A	897,820	801	583
*ES4RX	7A	13,200	70	66

European Russia - District 1

RW1A	A	10,335,303	3763	1173
RA1AL	"	1,306,868	1097	628
RA1TV	"	551,692	627	428
R1BW	"	527,820	703	463
RN1ON	"	420,420	625	420
RA1CP	"	66,230	208	185
RM1T	7	1,613,406	991	607
				(OP:R1TE)
*RZ1OK	A	1,284,588	1023	612
*UA1CE	"	298,395	449	349
*UA1CUR	"	156,607	308	253
*R1AL	"	148,488	330	269
*RA1WA	"	122,807	287	227
*RK1AD	"	107,844	289	228
*RW1AI	"	22,000	108	100
*RU1AT	"	3,663	38	37
*UA1CGS	7	38,556	126	119
UA1ANA	AA	2,470,160	1586	770
RA1QD	"	704,385	657	495
UD1A	"	205,884	368	301
RV1CC	14A	79,200	207	180
RM1M	"	69,344	210	176
				(OP:RO1B)
*RT1Q	AA	148,352	293	244
*R1DX	"	140,448	291	264
*UA1CEC	"	120,640	328	232
*RT1O	"	113,850	352	253
*RW1CM	"	35,483	149	137
*R1OO	"	4,551	39	37
*UA1OOX	21A	343,926	485	386
*RV1ZT	14A	6,497	76	73
*UB1CAK	7A	282,716	370	322

European Russia - District 3

RA3NC	A	787,448	767	514
RM2U	"	390,583	454	337
				(OP:RU3UR)
RD3AT	"	269,777	492	349
UA3PI	"	204,300	381	300
R3BB	"	98,000	241	196
R3QN	"	65,772	221	189
R3BT	"	36,360	124	101
RT3I	"	28,928	119	113
RT5X	"	12,616	76	76
R3QF	"	5,168	43	38
RV3TG	"	4,480	60	56
UA3DSN	"	2,952	37	36
RT5Z	21	4,410,000	1985	1050
				(OP:RA3CW)
R5WW	"	1,903,685	1283	763
RK3ER	"	1,247,034	957	614
RW3XM	14	531,987	670	463
*RV3ZN	A	2,065,336	1456	728
*R3OM	"	960,840	995	510
*RM3Z	"	824,970	945	535
*RW5CW	"	684,440	755	482
*R3VL	"	389,640	583	382
*RA3MD	"	350,432	493	376
*RU5TT	"	306,488	502	364
				(OP:UA3TW)
*RA5FB	"	286,781	489	341
*R5DT	"	251,160	381	280
*RZ3QM	"	226,728	382	282
*RM3G	"	196,935	392	285
*RA3YAO	"	191,187	402	291
*RD3FV	"	178,360	351	280
*RX3VF	"	169,560	321	270
*RX3AGQ	"	158,424	326	276
*RZ3DC	"	67,932	175	148
*R2EA	"	66,738	185	147
*RU3UW	"	41,850	176	155
*RN3YA	"	39,767	191	161
*UA3UBT	"	34,804	125	113
*UC5G	"	23,760	142	120
*R3OR	"	20,091	128	111
*UG3G	"	10,528	102	94
*RX3MM	"	9,768	73	66
*RT5Q	"	9,735	62	59
*RZ3DZ	"	4,446	40	39
*RO5O	28	84,861	238	189
*RZ3XA	"	84,630	219	186
*R3HD	"	29,670	131	115
*RM5Z	"	16,511	88	79
*RU3XB	"	13,764	81	74
*RD3FT	"	960	22	20
*UA3ABJ	21	615,840	649	480
*UA3YAA	"	341,640	443	365
*RZ3ATG	"	192,003	296	287
*R2SA	"	62,264	206	181
*RM2T	"	34,524	151	137
*UA3VLO	"	3,403	41	41
*RV3VR	14	37,265	151	145
*UA3YET	7	167,076	310	252
*RD3FP	"	74,646	210	174
*R2OM	"	39,634	156	133
*R2UZ	"	30,688	122	112
*RV3FW	3.5	51,852	172	149
*RY3F	"	35,500	147	125
*UA3DCE	"	1,624	29	28
R3KM	AA	5,794,038	2363	1107
UI3A	"	1,890,470	1327	790
UI3D	"	1,077,312	1095	543
R3VO	"	1,003,770	877	570
RT5C	"	816,232	777	514
UD3D	"	467,775	574	405
				(OP:R3D-88)
UA3QGT	"	121,275	289	231
RA3TT	"	3,956	48	46
R3LA	"	2,414	36	34
UA3RF	21A	1,395,534	969	669
UI5F	"	1,245,420	965	629
RK3FT	"	697,536	713	448
RG5R	14A	1,096,188	1044	668
RL5A	7A	2,628,850	1284	725
RT2D	3.5A	198,450	352	270
RT3T	"	46,968	153	152
RA5B	"	2,484	37	36
*UA5F	AA	1,966,614	1396	741
*R3QA	"	1,517,964	1222	714
*UA3QPA	"	1,482,488	1078	644
*UA3QAM	"	1,044,253	769	619
*R2DFD	"	591,828	696	447
*UC5D	"	485,483	658	409
*RM2D	"	382,155	560	365
				(OP:SM6LRR)
*RA3FD	"	302,720	428	344
*RK2M	"	238,400	397	298
*RK2A	"	66,246	176	122
*RN3N	"	52,812	170	162
*RZ3AUL	"	33,600	152	140
*UA3RJ	"	31,240	126	110
*RM3DA	"	30,688	129	112
*RZ3FQ	"	24,780	112	105
*RK3IM	"	17,762	88	83
*RG3AR	"	13,064	94	92
*RU3U	"	7,080	62	60
*RA3QH	"	6,419	52	49
*RK4HZ/3	"	5,005	60	55
				(OP:RK4HZ/3)
*RL3T	"	4,368	51	48
*RG3B	14A	221,028	400	326
*RA3ID	"	13,195	73	65
*UA3MIF	7A	1,695,576	946	636
*RK3DHU	"	264	11	11
*UA3YCX	3.5A	170	10	10

European Russia - District 4

RL4F	A	2,301,240	1429	755
RQ4N	"	362,805	434	335
RA4PQ	"	164,952	299	232
RU4AA	"	124,423	258	221
RA4ZA	"	22,518	158	139
UA4NC	"	15,916	105	92
RN4NF	"	864	17	16
*RN4W	A	778,500	830	519
*RQ4D	"	496,536	684	408
*RN4SC	"	472,464	620	408
*RM4C	"	327,832	492	344
*RT4P	"	254,184	474	357
*RN4HAB	"	183,748	407	284
*RZ4AZ	"	109,272	297	232
*RX4CD	"	86,317	239	209
*RQ4C	"	55,490	221	179
*UA4ARF	"	51,504	208	174
*UA4CNJ	"	47,047	164	143
*RA4ACX	"	38,760	147	136
*UA4CIF	"	20,874	103	98
*RA4L	"	13,268	130	107
*RA4LK	"	370	11	10
*UA4PAQ	"	320	16	16
*RA4UAT	"	108	6	6
*UA4QK	21	69,094	193	179
*RK4FM	"	18,905	98	95
*RT4W	14	1,748	38	38
UA4W	AA	8,988,807	3214	1257
R4RR	"	8,090,523	2986	1197
RW4W	"	4,757,570	2385	1030
RC4HAA	"	2,389,770	1732	835
				(OP:RU4HY)
RL4A	"	989,334	918	591
UA4CC	"	73,152	249	192
RA4LO	21A	839,764	792	596
UA4WI	14A	2,510,865	1609	945
*RW4WA	AA	2,192,976	1424	873
*UA4AGO	"	742,920	827	492
*RD4A	"	677,976	815	492
*RU4LM	"	365,238	455	394
*R4WT	"	231,840	487	336
*UF4M	"	190,450	389	293
				(OP:UA4LL)
*RW4CLF	"	120,696	251	188
*RM4W	"	70,329	243	197
*UA4FDL	"	18,656	97	88
*UA4PCF	"	11,484	69	66
*RN4AM	"	1,200	20	20
*RU4SO	21A	600,692	665	526
*RX4HX	14A	308	15	14
*RW4LR	7A	525,159	491	387

European Russia - District 6

UA7K	A	9,402,086	3695	1142
				(OP:RW7K)
RG6G	"	6,578,000	3023	1040
UC7A	"	3,805,758	2143	894
RA7R	"	1,554,984	1205	626
RM6Y	"	878,769	902	513
RX6AM	"	869,343	883	543
RA6AN	"	711,374	673	401
RA7A	"	215,952	361	264
R7KO	"	120,330	256	210
RV6LN	"	675	15	15
UA6AK	28	199,368	381	284
R7AW	"	150,597	349	261
RW7M	21	1,253,616	1025	656
UA6AKD	14	117,820	342	274
*UA6CC	A	2,127,590	1397	755
*UC6A	"	2,009,997	1472	711
*RM7M	"	1,522,934	1359	601
*R7KX	"	1,202,456	1049	584
*RM7C	"	856,256	1047	544
*R6AJ	"	756,800	904	473
*UI7F	"	692,622	736	483
*R7MC	"	543,888	680	432
*RA6FUZ	"	353,192	525	371
*R7NW	"	255,192	437	343
*UA6HLN	"	136,400	300	248
*R7RM	"	117,486	235	183
*RU6MO	"	93,436	243	188
*RK6HG	"	92,530	208	190
*R7KZ	"	73,647	203	167
*UA6HI	"	61,172	181	164
*UI7K	"	52,745	189	137
*UA6HFI	"	52,548	176	151
*RA6WF	"	48,334	163	143
*RU6CO	"	31,944	135	121
*RC6AE	"	31,512	120	101
				(OP:RU6BL)
*UA6AUA	"	25,830	115	82
*R6KA	"	23,912	114	98
*R6LAQ	"	23,715	103	93
*UA6LCJ	"	22,968	96	87
*RA7KO	"	13,416	90	86
*UA6HRX	"	4,960	63	62
*R6KY	"	4,536	44	42
*R7AM	28	49,981	176	151
*R7KH	"	14,162	80	73
*RA6DT	"	4,120	43	40
*RV6BEH	21	178,825	346	311
*R7MT	"	131,064	296	254
*UA6JQ	"	216	9	9
*RU6CS	14	1,113,706	998	682
R6AF	AA	3,886,662	1861	1014
RN6L	"	601,216	711	488
RA6MQ	"	504,445	684	433
RX7T	"	418,608	526	408
RA6YDX	"	206,388	387	294
R7FF	"	185,225	277	239
RK7F	"	82,026	209	186
RA6AAW	"	8,848	62	56
RM6C	21A	4,905,360	2137	1080
				(OP:UA6AA)
UA6LCN	14A	1,913,344	1303	808
RC7A	"	1,188,081	1060	711
RC6U	"	763,344	876	589
R6CC	7A	854,500	599	500
*RW7F	AA	856,524	929	548
*UA6YH	"	720,040	734	470
*R7CK	"	231,792	315	264
*R7KMA	"	181,188	323	252
*RA6HSM	"	147,117	400	267
*RX7K	"	92,745	257	229
*R7CA	"	90,626	276	226
*UA6GF	"	88,992	241	216
*R7GA	"	75,451	228	197
*RU6B	"	13,230	80	63
*RA6XB	"	9,856	69	64
*RG7K	"	9,275	58	53
*R7HL	"	3,564	38	36
*RQ7L	"	2,607	34	33
*R7CT	21A	636,840	635	488
*R7MM	"	498,651	540	463
*UA6LUQ	14A	737,715	859	561
*R6CW	"	25,704	110	108
*RV6LCI	7A	693,440	574	440

European Russia - District 9

*RX9FB	A	1,190,673	1098	633
*UA9FGJ	"	321,678	446	378
*RM8G	"	292,500	414	375
*UA9XBJ	"	164,608	357	256
*UA9FKH	21	58,320	206	180
*RT9X	14	44,020	157	142
R9ØIARU	AA	1,855,168	1496	707
				(OP:R9XC)
R9XT	"	187,860	406	303
RU9F	"	310	11	10
*RA9X	AA	311,454	526	363
*R8XF	21A	290,675	494	385

European Turkey

*TA1CH	A	120	10	10
*TC1ØØKT	14	462	23	21
				(OP:TA3AER)
*TA1L	AA	96,135	231	195
*TC1DX	3.5A	3,600	45	40
				(OP:TA1DX)

Faroe Islands

*OY4M	A	4,959	63	57

Fed. Rep. of Germany

DJ5MW	A	9,280,124	3381	1084
DL2CC	"	7,295,070	2806	1009
DK3GI	"	4,244,900	2062	850
DJØSP	"	2,767,872	1727	816
DR7B	"	1,016,540	996	530
				(OP:DL2JRM)
DJ9ØIARU	"	648,445	745	485
				(OP:DD2CW)
DC9ZP	"	366,735	494	345
DL7UGO	"	304,200	398	300
DJ1TO	"	267,597	372	297
DQ6Q	"	215,506	333	277
DL2ZBO	"	182,875	358	275
DJ5QV	"	156,857	289	227
DF5BX	"	126,690	323	246
DCØLGST	"	116,850	326	246
				(OP:DL5MX)
DL1TPY	"	99,450	273	225
DL6DVU	"	72,960	229	192
DL6ZXG	"	69,208	183	164
DL1LOD	"	65,987	162	151
DL1BUG	"	44,520	175	140
DGØKS	"	38,924	155	148
DL6MHW	"	30,956	120	109
DKØSU	"	22,366	109	106
				(OP:DF7SA)
DK3WW	21	2,149,344	1172	816
DB7MA	"	30,940	120	119
DL9LM	14	506,825	605	485
DJ2YE	7	90,134	223	187
*DC4A	A	4,462,575	2112	897
				(OP:DL4NAC)
*DD5M	"	2,531,178	1634	746
				(OP:DJØZY)
*DF3AX	"	1,845,032	1454	658
*DL3KWF	"	1,783,254	1406	659
*DL5KUD	"	1,769,630	1185	653
*DM4EE	"	1,759,968	1242	672
*DL4ME	"	1,655,144	1277	626
*DD3D	"	1,380,502	1138	646
				(OP:DK3WM)
*DL4ZA	"	911,750	856	521
*DJ4MH	"	828,282	880	481
*DL4AUK	"	801,679	837	461
*DL3ZAI	"	536,137	625	401
*DJ3XA	"	456,615	577	365
*DJ2IA	"	394,450	485	350
*DL3MVC	"	310,616	519	328
*DF3OL	"	300,312	488	344
*DL5CD	"	291,850	482	325
*DL3EBX	"	273,307	461	337
*DK2WU	"	270,230	425	305
*DL3KWR	"	220,008	413	309
*DL3YEI	"	217,832	400	292
*DJ1OJ	"	200,031	391	299
*DF5AN	"	191,132	294	284
*DL1YCF	"	183,264	364	276
*DK3YD	"	168,360	334	230
*DK6CQ	"	136,160	291	230
*DF3EH	"	125,195	290	245
*DH2URF	"	122,728	298	232
*DJ7MH	"	121,768	357	248
*DO6LE	"	106,981	229	203
*DF3TE	"	99,750	269	210
*DO1AYJ	"	88,816	278	208
*DJ6FO	"	83,955	244	193
*DJ4WM	"	75,650	221	170
*DL2AWA	"	70,479	234	191
*DL9IM	"	61,880	210	170
*DL7DZ	"	57,876	202	156
*DL5CL	"	57,105	159	141
*DF8TY	"	55,204	174	148
*DQ4ØAIX	"	54,144	212	188
				(OP:DL3TU)
*DK5ZX	"	53,550	224	175
*DL5AOJ	"	47,360	187	160
*DK7GH	"	37,485	128	119
*DL1VJL	"	35,442	111	99
*DF7GG	"	35,280	125	112
*DL1HSI	"	32,128	142	128
*DO2MS	"	30,810	138	130
*DL5MHR	"	30,129	132	121
*DK8EY	"	28,080	120	104
*DL4JU	"	28,072	141	121
*DM2TO	"	27,352	113	104
*DL1WM	"	26,892	119	108
*DL2ANM	"	25,942	130	119
*DL9FB	"	21,582	112	99
*DL6NWA	"	20,406	137	114
*DG8KAD	"	18,408	115	104
*DL1CJ	"	15,617	114	97
*DJ6UP	"	12,556	93	86
*DKØIU	"	12,525	85	75
				(OP:DJ4KW)
*DL4DRW	"	11,570	71	65
*DL5CX	"	8,112	56	52
*DL1SKK	"	5,733	74	63
*DA3T	"	4,437	55	51
*DK9MH	"	3,698	46	43
*DL2DYL	"	1,720	41	43
*DL7VRG	"	1,426	32	31
*DJ5KX	"	682	22	22
*DK4EF	"	646	17	17
*DD5MA	"	252	14	14
*DH1PAL	"	81	9	9
*DK6WK	"	40	7	8
*DJ6TK	28	22,220	121	110
*DL9GCG	"	13,932	85	81
*DJ9KH	"	6,077	62	59
*DL1DTL	"	1,984	34	32
*DL9MFY	"	27	3	3
*DL2RUG	21	20,554	90	86
*DL2MIH	"	3,589	39	37
*DJ3CS	"	3,572	39	38
*DJ6DO	"	104	8	8
*DO1DXX	"	21	3	3

***DL9ZP**	14	1,265,920	1020	688
**DL1BA*	"	236,384	375	332
*DL2DXA	"	130,556	276	254
*DL1THB	"	78,648	265	226
*DLØGEO	"	20,066	140	127
				(OP:DL2YAK)
*DM3DA	"	1	1	1
***DL6HCC**	7	684,156	639	438
*DL6KWN	"	614,978	575	403
*DFØSX	"	121,303	275	217
DL6KVA	AA	4,405,792	1834	1051
DL/KU1CW	"	3,965,848	1949	904
DL3ANK	"	3,777,114	1557	906
DL5YM	"	3,079,916	1701	812
DK2CX	"	2,941,736	1340	802
DP3D	"	2,750,116	1591	818
				(OP:DK3KD)
DHØGHU	"	2,640,000	1442	825
DJ9RR	"	2,439,864	1409	824
DJ5AN	"	2,289,088	1234	752
DL5JS	"	2,266,308	1439	708
DL4WA	"	2,239,314	1193	786
DJ8EW	"	2,095,210	1404	710
DL1NEO	"	1,660,951	1100	697
DJ6QT	"	1,225,490	874	610
DL5JQ	"	1,076,230	1037	562
DL9JON	"	948,555	837	535
DK5AD	"	924,686	806	514
DJ9MH	"	899,052	771	539
DJ6OZ	"	793,002	774	478
DF1LON	"	782,068	661	476
DK1AX	"	689,656	685	461
DJ3WE	"	649,603	635	421
DJ5IW	"	581,700	596	420
DL6ZBN	"	427,063	496	361
DL8SCG	"	403,560	490	342
DL5XL	"	351,021	476	363
DL5WS	"	345,088	450	337
DL5LYM	"	338,625	404	315
DL1RTS	"	320,943	534	357
DK6WL	"	307,692	440	333
DG4R	"	304,980	409	345
				(OP:DL1RG)
DAØT	"	299,105	442	367
				(OP:DL7AT)
DL4RDJ	"	232,399	403	307
DL5ST	"	206,391	374	267
DJ9HX	"	185,260	299	236
DK2AT	"	146,410	323	242
DL8NBJ	"	140,658	269	238
DL8UAT	"	137,082	243	201
DL3AMI	"	132,309	289	241
DL8CA	"	114,868	235	188
DJ7JC	"	87,894	207	171
DF9VJ	"	61,350	176	150
DL5ASK	"	52,640	154	140
DL5JAN	"	43,952	157	134
DL9NDV	"	8,526	63	58
DL9GFB	"	7,080	66	60
DH6DAO	"	5,586	42	42
DM1LM	"	4,173	40	39
DL1SVA	"	3,162	36	34
DM5EE	"	2,370	42	30
DF5AU	"	1,456	26	26
DAØCA	28A	366,024	561	404
(OP:DL1REM)				
DL5RMH	21A	2,573,272	1377	872
DL4YAO	"	22,344	96	84
DL5AWI	7A	2,951,889	1316	717
DK5XG	"	751,160	683	445
DO4DXA	3.5A	2,294	38	37
***DL6RAI**	AA	3,981,516	1698	924
*DJ8OG	"	3,903,210	1751	930
*DM8T	"	2,413,824	1507	768
				(OP:DL8MAS)
*DK5AX	"	2,346,240	1408	752
*DK5DQ	"	1,884,960	1137	672
*DJ5MO	"	1,581,545	1224	619
*DL4FN	"	1,429,488	1030	648
*DK1KC	"	1,408,240	1049	607
*DL4FDM	"	1,033,464	843	578
*DM3PKK	"	810,376	792	499
*DL5YL	"	744,724	801	478
*DK8ZZ	"	727,328	792	476
*DF7ZS	"	667,212	572	507
*DL6DH	"	634,522	725	427
*DL1HBT	"	623,820	669	444
*DL5ARM	"	575,450	688	425
*DF8XC	"	574,742	608	427
*DL6ON	"	443,586	547	363
*DQ7A	"	442,900	638	412
				(OP:DJ7AT)
*DL2NBY	"	439,148	657	404
*DD9WG	"	326,859	425	377
*DK2DQ	"	252,120	437	264
*DM2RN	"	224,438	387	293
*DF1HF	"	215,280	317	299
*DJ9SN	"	199,360	392	280
*DL3KVR	"	198,961	342	301
*DM6WAN	"	179,935	336	265
*DF9MV	"	176,410	340	299
*DL8UGF	"	152,540	345	263
*DL5IF	"	119,280	283	213
*DH3SR	"	114,807	290	213
*DL4AC	"	101,640	242	210
*DL1GBQ	"	100,553	246	193
*DL9GTB	"	83,916	213	189
*DL5DBH	"	68,134	194	163
*DD1MAT	"	60,588	183	153
*DL5ZBA	"	59,976	158	153
*DL8ZAJ	"	49,010	169	145
*DL4EBW	"	46,294	193	158
*DK4VY	"	42,117	165	139
*DK4YJ	"	36,176	160	136
*DF5TR	"	34,077	124	111
*DL1ASH	"	32,670	153	121
**DK7ZH*	"	32,606	165	137
*DJ3HW	"	26,640	121	111
*DK4RX	"	24,300	108	90
*DL6DSA	"	20,608	92	92
*DK6BT	"	19,503	105	99
*DL6UM	"	17,738	115	98
*DC2IP	"	14,229	114	93
*DL5KW	"	13,363	89	83
*DG7RO	"	11,247	77	69
**DM3F*	"	11,178	73	69
				(OP:DH5FS)
*DM6CS	"	6,882	66	62
*DL2RD	"	6,120	53	45
*DL1NPG	"	3,780	52	45
*DL5ANS	"	901	18	17
*DK6YM	"	168	8	7
*DBØHY	"	40	4	4
***DF4WC**	21A	57,152	172	152
*DL1DVE	"	243	9	9
***DL5GAC**	14A	252,339	442	361
***DK2FG**	7A	1,864,970	994	659
*DF8AE	"	463,430	564	383
*DF1LX	"	21,510	98	90
***DL7URH**	3.5A	248,160	398	282
*DL7UIO	"	53,397	181	153

Finland

OH1ØA	A	1,569,563	1419	643
				(OP:OH1HS)
OH6XY	"	552,615	625	399
OH2XX	"	467,487	618	381
				(OP:@OH2U)
OH2VZ	"	325,768	452	344
OH1BOI	"	91,104	253	219
OH2IS	"	8,427	56	53
OH2BAH	21	61,608	197	151
OH6GAZ	"	5,831	50	49
OG2N	14	308,560	487	406
				(OP:OH2BN)
OG25YL	7	1,483,874	1017	581
OH8CW	3.5	132,108	295	218
***OH3KQ**	A	616,356	841	468
*OH8MBN	"	554,472	633	453
*OH5YU	"	154,785	328	255
*OH2MGA	"	149,340	320	262
*OH4A	"	15,386	116	98
				(OP:OH6LI)
**OH1TS*	"	9,240	66	55
***OH5UFO**	28	59,508	261	174
***OH3LB**	14	132,192	376	272
***OH7MFO**	7	8,265	61	57
OG6N	AA	6,308,874	2499	1118
OH6MW	"	5,992,863	2516	1091
OG73X	"	5,480,440	2322	1058
				(OP:OH8LQ)
OG4T	"	2,679,244	1469	842
				(OP:OH4MFA)
OG3ØOJ	"	2,309,451	1656	753
				(OP:OH3OJ)
OH3FM	"	910,695	987	545
OH6RE	"	698,544	575	528
OH6BA	"	177,366	340	246
OG2K	"	50,024	178	148
OG55W	28A	58,562	240	178
OG1D	7A	487,639	478	337
***OH2LNH**	AA	150,616	341	268
*OH2KM	"	139,100	377	260
*OH4KZM	"	21,504	122	112
*OH5BQ	"	192	10	8

France

TM5Y	A	12,097,904	3667	1187
				(OP:F8DBF)
TM6X	"	3,931,116	1985	883
				(OP:F5VHY)
F/G4BJM	"	1,380,037	1194	587
F8FUA	"	132,305	291	235
F2DX	28	529,209	685	463
***F5ICC**	A	581,670	639	414
*F2AR	"	410,784	542	389
*F5SGI	"	365,332	483	361
*F5VLY	"	305,276	489	334
*F1VEV	"	18,291	101	91
*F8EBY	"	13,502	95	86
*F8AAN	"	5,984	72	68
*F6CYT	"	4,416	50	46
*F4GFT	"	4,224	53	48
*F3WT	"	2,295	29	27
***F5VMN**	21	769,450	787	550
*F1IRU	"	2,016	28	28
***F5VJL**	14	100,380	276	239
***F5SDD**	7	31,248	113	112
F5VKT	AA	4,355,491	1962	911
F8CRS	"	2,150,397	1169	709
TM4ØRADS	"	1,119,528	1042	584
				(OP:F6AUS)
TM7D	"	983,535	955	551
				(OP:F5NBX)
F6HDI	"	350,390	479	370
F5CQ	"	57,536	130	124
TMØR	21A	4,192,860	1937	1005
				(OP:F6IRA)
***TM6M**	AA	4,060,992	1815	832
				(OP:F4DXW)
*F4DVX	"	157,380	325	244
*F5IYJ	"	38,991	127	123
*F4FFZ	"	5,676	44	43
***F1EBN**	21A	484,632	519	424
***F1ULQ**	1.8A	1,081	25	23

Greece

SV8CRI	A	935,598	932	566
***SW8WW**	A	1,467,900	1233	630
				(OP:HAØHW)
*SV1AJO	"	274,848	497	336
*SV7CUD	"	23,562	117	102
SV1ENG	AA	1,665,368	1417	712
SV6DBL	"	39,039	152	143
SV2JAO	28A	394,542	679	414
SZ6P	14A	2,398,016	1620	842
***SV4FFL**	AA	751,440	910	496
*SV1RHL	"	467,672	637	424

Guernsey

***MUØFAL**	A	240,995	449	307

Hungary

HA8JV	14	4,057,200	2009	980
HA7JQK	"	71,676	217	198
***HA1BC**	A	2,183,265	1326	717
				(OP:DL1MAJ)
*HA2OS	"	805,498	792	487
*HA8WZ	"	770,925	804	475
*HA2MN	"	663,156	651	468
**HA4YF*	"	190,608	319	264
***HGØR**	28	142,800	323	255
				(OP:HAØNAR)
***HG6C**	14	1,358,720	1091	704
				(OP:HA6IAM)
*HA6OA	"	1,320,158	1101	709
***HA4XH**	7	2,021,635	1118	623
*HA5MY	"	985,005	736	477
*HA3MU	"	634,688	603	422
***HA3LN**	3.5	497,554	594	386
**HA4N*	"	244,200	421	275
*HA7JJS	"	29,415	122	111
***HA1TI**	1.8	39,804	165	124
HG3ØCW	AA	9,173,880	3095	1224
				(OP:HA3NU)
HA5PT	"	4,278,032	2041	892
HA3OU	"	2,147,556	1385	713
HG8N	"	1,362,192	1115	624
				(OP:HA8VK)
HA8VV	"	1,121,760	750	615
HA8TP	"	917,412	856	534
HG5D	14A	4,108,241	1999	1033
				(OP:HA8QZ)
HG4F	"	2,191,020	1378	795
				(OP:HA4FF)
HA5NR	"	434,768	568	464
HA8BE	"	864	24	24
HA3PW	7A	1,082,160	784	501
HA8A	3.5A	1,137,525	878	523
				(OP:HA8DZ)
***HA6NL**	AA	3,148,850	1436	887
*HA5PP	"	1,761,566	1132	614
*HG2A	"	1,450,240	1104	640
				(OP:HA1RJ)
*HA6PJ	"	864,055	849	505
*HA6VV	"	475,209	592	397
*HA8CQ	"	141,126	343	258
*HA2VR	"	24,045	117	105
***HG8C**	21A	411,200	503	400
***HA6FQ**	7A	1,369,830	901	593

Iceland

TF3CW	21	124,211	299	223
***TF3VS**	A	60,214	194	161
*TF3JB	"	1,071	21	21
TF3W	AA	5,980	54	46
				(OP:TF3DC)

Ireland

EI7M	A	9,778,131	3503	1107
				(OP:GØCKV)
EI1Y	AA	8,178,720	2883	1056
				(OP:SQ6MS)
EI6JK	7A	23,247	84	81
***EI4CF**	7A	449,394	455	363

Isle of Man

***MD2C**	A	4,013,338	2062	878
				(OP:MDØCCE)
GD4EIP	AA	10,744	80	79

Italy

4U5F	A	6,688,494	3092	1007
				(OP:S53R)
IO2X	"	6,310,332	2747	982
				(OP:IK2NCJ)
IK3UNA/1	"	999,580	1068	530
IQ2BG	"	712,932	763	484
				(OP:IK2AHB)
IB3C	"	676,008	855	492
				(OP:I3FIY)
IK2SND	"	624,064	805	398
IZ4DZD	"	294,678	448	321
IK3DVY	"	197,087	304	253
IK2AOO	"	149,184	324	252
IN3ISV	"	88,192	222	208
II3AC	"	23,100	122	100
				(OP:I3FDZ)
IZØUIN	"	4,020	65	60
IK2AUK	"	2,982	43	42
IK4DCX	14	65,436	195	164
IZ1GAR	7	1,970,152	1090	643
IQ2CF	3.5	315,832	440	296
				(OP:IK2CLB)
***IY3A**	A	7,230,880	2774	1051
				(OP:IZ3EYZ)
*IK4EWX	"	893,235	932	543
*IZ4DYX	"	802,760	831	470
*IR1X	"	739,713	997	507
				(OP:IZ1GLX)
*I6FDJ	"	656,690	818	485
*IZ2GRG	"	414,508	473	346
**IV3UHL*	"	376,092	517	337
*IK2UEX	"	217,448	444	308
*IZ2OOS	"	206,360	370	280
*I5YKQ	"	147,846	352	246
*IQ1TO	"	126,108	273	226
*IN3MNS	"	108,992	261	208
*IZ5FDE	"	92,906	289	206
*IK3XJP	"	92,400	201	168
*IK5/DL5RDP	"	74,844	237	189
*IW3HXR	"	61,778	169	158
*IN3ZWF	"	60,621	197	167
*IK2SYK	"	58,656	191	156
*IK1MEG	"	50,544	187	162
*IZ3EIN	"	44,849	196	149
**IK2TKX*	"	39,600	185	132
*IZØLZC	"	35,412	211	156
*IU4CHE	"	25,755	100	85
*IV3DYS	"	24,750	126	110
*IW5BT	"	24,395	122	119
*IK2AIT	"	24,309	135	111
*IW5ELA	"	23,320	120	110
*IZ3QCH	"	19,080	119	106
*IK2NUX	"	18,810	105	99
*IK5LWE	"	8,640	66	64
*IK2REA	"	7,812	65	62
*IK3TPP	"	3,792	49	48
**IK2SAU*	"	3,784	44	44
*IK4XQT	"	2,295	51	45
*IK8ARF	"	1,904	30	28
*IK7LVE	"	1,855	36	35
*IZ2CSX	"	486	18	18
*IØ/S53T	"	240	16	12
***IU1DZZ**	28	13,197	89	83
*IKØOKY	"	8,832	73	69
**IR4E*	"	1,860	32	30
***IK7XGH**	21	7,920	74	72
*IV3DLW	"	7,552	64	64
*IZØEUS	"	384	12	12
***IQ2CU**	14	184,701	372	319
				(OP:IN3OWY)
*IK1ZFO	"	91,568	280	236
IO1T	AA	8,956,704	2963	1181
				(OP:IZ1LBG)
IR2C	"	7,846,264	2809	1096
				(OP:IK2PFL)
IR3C	"	2,802,744	1526	804
				(OP:I3VJW)
IKØYVV	"	2,649,600	1578	768
IK8UND	"	2,420,080	1488	845
IZ3SQW	"	2,348,819	1567	737
IY7M	"	1,449,644	1282	644
				(OP:I7PHH)
IZ3EAW	"	1,207,206	1115	603
IZ2DII	"	910,188	867	524
I2WIJ	"	545,706	599	426
I1HJT	"	354,375	577	375
IK2YXB	"	280,228	378	317
IZ5NFD	"	253,368	453	306
II2EXPO	"	140,166	293	234
				(OP:I2AZ)
IZ3XEF	"	33,384	111	107
IR1Y	21A	4,907,800	2089	1060
				(OP:IK1YDB)
I1NVU	"	1,234,823	925	653
I2IFT	7A	1,233,486	804	522
IV3AZV	"	349,050	435	325
IV3SKB	3.5A	932,631	816	499
***II3W**	AA	5,170,180	2196	961
				(OP:IK3QAR)
*IN3FHE	"	1,572,250	1086	662
*IO3J	"	1,463,956	1025	611
				(OP:IV3ZXQ)
*IV3BCA	"	1,460,224	1056	713
*IZ3NYG	"	987,325	779	541
*IQ5AE	"	352,240	446	370
				(OP:IZ5IOV)
*IW7DMH	"	147,318	299	258
*IK2CFD	"	55,132	173	154
*IZ6BXQ	"	45,264	165	138
*IZ1CLA	"	31,702	144	131
*IU3AZC	"	10,270	93	79
*IK2IKW	"	9,088	72	71
***IK8TEO**	14A	1,939,047	1330	877
*IZ8EFD	"	1,385,595	1072	751
*IW2FUT	"	121,032	277	246
*IK8SEU	"	83,332	256	251

Jersey

***MJ5Z**	A	5,388,352	2573	944
				(OP:JK3GAD)

Kaliningrad

RN2FQ	A	81,510	203	165
RA2FB	21	49,392	153	144
***RA2FAC**	A	1,032,023	1017	551
*UA2FP	"	220,071	434	327
***UA2FL**	28	26,712	168	126
UI2K	AA	7,291,166	2729	1138
***RT2F**	7A	119,592	231	198

Kosovo

Z63MED	A	1,432,890	1370	610
Z6ØA	"	56,780	203	167
				(OP:Z61DX)
***Z62FB**	A	1,371,076	1281	644
				(OP:DL7FER)

Latvia

YL2SM	A	6,012,270	2654	990
YL5T	"	4,039,628	2208	874
				(OP:YL3DQ)
YL6W	28	241,299	507	331
				(OP:YL2GD)
YL2PJ	21	110,940	247	215
YL3FT	14	3,894,560	1990	964
***YL2CV**	A	1,768,232	1261	664
*YL3GAZ	"	551,694	663	429
***YL5W**	21	670,256	683	514
YL9T	AA	4,838,000	2374	1000
				(OP:YL2TW)
YL5X	"	1,415,492	1155	668
YL2VW	"	536,042	575	389
YL2IP	"	59,657	187	169
YL3CW	"	21,114	120	102
YL2KO	28A	54,008	212	172
YL2PP	"	18,308	98	92
YL2BJ	14A	2,992,136	1677	952
YLØY	"	697,938	791	534
				(OP:YL2GQT)
YL6Z	7A	1,486,316	889	566

Lithuania

LY7Z	A	6,803,184	2713	1046
LY5E	"	6,319,760	2723	985
				(OP:LY2IJ)
LY2NK	"	1,076,127	1004	533
LY5O	"	45,824	160	128
LY2AX	28	8,316	88	77
LY2OF	21	13,816	90	88
LY7M	1.8	206,150	380	266
LY51BC	"	122,112	295	212
***LY5R**	A	5,653,124	2503	989
				(OP:LY9A)
*LY8O	"	4,553,499	2224	941
*LY4L	"	4,211,766	2237	878
*LY1M	"	732,888	770	468
*LY2OM	"	485,472	665	416
*LY2SQ	"	4,389	61	57
***LY2T**	14	390,390	605	462
*LY2BUU	"	344,000	508	400
***LY2AT**	7	44,756	148	134
***LY5I**	3.5	523,908	620	396
*LY2GW	"	69,465	203	165
LY2K	AA	1,995,574	1487	686
LY15ØITU	"	552,960	648	432
				(OP:LY3BY)
LY6A	"	187,572	275	231
LY2OU	28A	62,128	206	176
***LY3B**	AA	4,898,250	2326	933
*LY2AJ	"	2,349,295	1597	769
*LY2NY	"	412,800	558	384
*LY2N	"	338,174	513	353
*LY2BBF	"	211,992	399	292
				(OP:LY4BF)
*LY4K	"	181,272	308	273
*LY3CY	"	180,999	398	273
**LY2BNL*	"	22,950	103	90
*LY2DV	"	9,394	83	77

Luxembourg

LX4A	21	184,269	343	257
				(OP:LX1NO)
***LX3DX**	A	9,042	71	66
***LX/OO9O**	AA	858,585	973	481
				(OP:ON7SS)

Macedonia

Z35F	3.5	471,466	589	361
**Z35G*	A	637,325	840	481
***Z35M**	"	546,406	694	434
***Z31WW**	14	137,460	353	290
***Z39A**	14A	1,123,820	1003	677

Malta

***9H1CG**	A	37,210	140	122

Moldova

***ER5DX**	A	89,424	211	162
***ER1CS**	3.5	65,832	197	156
***ER2RM**	1.8	7,316	64	59
***ER3DX**	AA	26,864	104	92

Montenegro

4O9ØA	A	8,826,392	3281	1094
				(OP:E73A/9A3A)
4O/S56A	21	773,968	825	488

Netherlands

PA3AAV	A	3,818,500	2004	875
PAØCT	"	291,942	482	331
PA5KT	"	99,093	252	201
PA3BWK	"	37,650	197	150
***PA/W1NN**	A	2,458,410	1544	681
**PA2W*	"	535,408	715	436
*PA5FN	"	408,006	560	342
*PA3I	"	320,281	537	347
*PA3DBS	"	214,415	441	305
*PA3AQL	"	95,460	282	222
*PA3FOE	"	91,164	279	214
**PA45AH*	"	81,120	256	195
				(OP:PAØFAW)
*PA3EEG	"	74,685	248	195
*PA1MUC	"	69,930	233	189
*PAØWLB	"	65,450	208	187
*PAØRBA	"	38,634	159	137
*PAØQRB	"	35,819	126	119
*PAØWKI	"	33,655	141	127
*PC3H	"	26,983	155	121
*PDØJMH	"	22,733	144	127
*PG2W	"	13,950	93	90
*PA5GU	"	13,340	104	92
*PA3CLQ	"	8,374	84	79
*PA7MDJ	"	7,791	50	49
*PA3GEO	"	4,977	73	63
**PAØJED*	21	1,100	22	22
***PA2REH**	14	614,482	713	527
PAØVAJ	AA	1,673,544	1321	677
PC2D	"	1,299,285	1106	585
PA5WT	"	1,183,678	1056	634
PA3EVY	"	445,788	469	366
PA5TT	"	352,515	493	355
PA2ALF	"	53,628	185	164
PA1BX	"	27,776	131	112
PA3EZC	"	24,698	117	106
PI4DX	21A	4,008,969	1835	963
				(OP:PAØRRS)
***PA9WOR**	AA	1,376,046	1059	603
*PA4O	"	841,074	912	533
*PA3BUD	"	766,656	739	484
*PA2GRU	"	375,873	543	349
*PC4H	"	308,490	479	339
*PAØO	"	269,546	435	307
*PA3HGF	"	119,080	300	229
**PC5Q*	"	56,440	199	166
*PA3CMF	"	29,526	157	133
**PA3GRM*	"	19,359	95	81
*PDØME	"	6,468	73	66
***PD1DX**	28A	277,105	486	353
***PAØRRS**	21A	950	19	19
***PD7RB**	14A	96,900	243	228
*PD3OES	"	49	7	7

Northern Ireland

GI5I	AA	1,503,128	1145	589
				(OP:GI4DOH)
***GIØRQK**	AA	1,444,528	1177	659

Norway

LA8HGA	A	494,979	730	417
***LA3S**	A	2,722,560	1735	768
				(OP:LA3BO)
*LN7TTT	"	1,331,148	1276	636
				(OP:LA5LJA)
*LA2HFA	"	806,823	812	471
*LA4CQ	"	516,627	741	419
*LA7SI	"	52,808	205	164
*LA8OKA	"	16,562	99	91
***LAØCX**	14	799,820	945	580
*LA8FTA	"	15,096	118	111
LA8OM	AA	4,656,771	2262	903
LA7GIA	"	1,997,632	1529	686
LA2AB	"	435,904	593	392
				(OP:LA6GF)
LA2US	"	44,759	166	143
LB2TB	"	4,290	43	39
LA1K	"	285	15	15
				(OP:LA6XTA)
LB5WB	"	3	1	1
LB6KC	28A	20,340	174	113
***LA3ZA**	AA	281,350	426	331
*LA3LJA	"	109,968	308	237
*LA1IO	"	54,418	206	161
*LA8CJ	"	968	25	22

Poland

SP9GR	A	1,316,049	1087	609
3Z4ØJIU	"	916,608	870	528
				(OP:SP6JIU)
SP5WA	"	862,650	754	486
SO4R	"	780,516	735	486
SQ7B	"	334,024	492	344
SQ6VIA	"	153,468	321	252
SP8HXN	"	3,040	41	40
SP8R	"	1,534	26	26
SP5AUY	28	16,340	95	86
SN5X	21	4,222,428	1954	903
				(OP:SP5GRM)
SN3A	7	4,019,200	1584	800
				(OP:SP3HLM)
SN6O	"	1,977,180	1134	620
				(OP:SP6ZC)
SP4BEU	"	625,056	579	408
***SP1AEN**	A	2,166,387	1496	673
*SP3JUN	"	1,022,140	967	490
*SP9EMI	"	500,198	589	383
**SP9M*	"	212,736	345	277
*SP9R	"	149,760	303	240
*SP9CXN	"	115,758	278	218
*SP5GKN	"	103,400	237	188
*SP3IOE	"	90,480	236	195
*SP1RKH	"	87,824	211	176
*SQ7LQJ	"	83,134	217	197
*SP9A	"	69,866	260	181
**SP2HMN*	"	54,810	164	145
*SP9AK	"	54,520	174	145
				(OP:SP9FWQ)
*SQ5JUP/5	"	49,416	181	142
**SP6BEN*	"	38,913	125	119
**SP9EML*	"	32,604	131	114
*SP3BES	"	23,183	103	97
*SNØDKG	"	21,762	103	93
*SP3MEP	"	10,608	82	78
*SQ3PMX	"	3,071	37	37

*SP9IHP	"	2,697	31	31
***SP9BNM**	**28**	**19,305**	**111**	**99**
***SN8T**	**21**	**379,260**	**496**	**387**
				(OP:SP8BVN)
*SP7OGP	"	36,920	146	130
*SP2AYC	"	22,338	106	102
*SP4AAZ	"	13,035	82	79
*SP9KJU	"	5,616	49	48
				(OP:SP9MDY)
***SP5LJP**	**14**	**646,280**	**687**	**535**
*SP4EOO	"	273,060	437	370
**SQ5RDX*	*"*	*104,784*	*272*	*236*
**SQ9I*	*"*	*95,046*	*247*	*217*
*SP5XO	"	65,120	194	185
*SP4ISX	"	59,616	216	184
*SP9OHL	"	24,198	116	111
***SP6OJE**	**7**	**1,490,261**	**990**	**563**
*SP7P	"	161,928	302	234
***SP4AWE**	**3.5**	**300,390**	**463**	**310**
*SQ3BDQ	"	11,388	76	73
***SP2GCE**	**1.8**	**10,764**	**84**	**69**
SN7Q	**AA**	**10,505,388**	**3426**	**1173**
				(OP:SP7GIQ)
SP2LNW	"	5,229,722	2004	958
SP9LJD	"	5,224,864	2147	992
SP2QG	"	1,809,687	1321	671
SP9W	"	932,124	834	519
SP3DOF	"	437,682	543	357
SP5TT	"	186,018	321	258
SP1MWN	"	31,980	137	123
SP3QDM	"	2,212	28	28
SP5GH	**28A**	**12,670**	**72**	**70**
SN8B	**21A**	**3,889,723**	**1850**	**929**
				(OP:SP8GWI)
SO4M	**14A**	**5,531,031**	**2354**	**1089**
				(OP:SP5UAF)
SN5N	"	2,142,400	1373	800
				(OP:SP5KP)
SP5ELA	**7A**	**1,617,984**	**955**	**576**
SO6C	**3.5A**	**746,998**	**711**	**458**
				(OP:SP6CIK)
SP3GTS	"	436,810	506	361
SP9ATE	*1.8A*	*113,487*	*284*	*209*
***SP9H**	**AA**	**2,863,168**	**1290**	**913**
*SP5CNA	"	1,459,920	1069	660
*SQ9FMU	"	363,667	481	359
*SQ8KFM	"	227,920	364	280
*SP2MKT	"	178,976	304	238
*SP5GDY	"	88,900	217	175
*SQ1EUG	"	77,916	207	172
*SP8UFB	"	19,305	111	99
*SQ9IAU	"	7,398	59	54
*SQ6LJV	"	6,192	48	43
*SQ5NRY	"	1,584	26	22
*SP1ADY	"	306	11	9
**SP8GQU*	*28A*	*69,420*	*189*	*178*
***SP6IHE**	**"**	**22,572**	**106**	**99**
*SP5BMU	"	2,993	43	41
***SP2FOV**	**21A**	**189,735**	**305**	**273**
*SP7JLH	"	141,313	277	251
**SP7LIE*	*"*	*27,621*	*103*	*99*
*SQ3R	"	20,152	93	88
				(OP:SQ3HMM)
*SP9RQH	"	14,784	80	77
***SN8N**	**14A**	**404,430**	**529**	**390**
				(OP:SP8HZZ)
*SP1C	"	74,496	215	194
***SP3A**	**7A**	**838,566**	**659**	**477**
*SQ5LTL	"	528,306	528	382
*SP2WGB	"	36,618	119	102
***SN7O**	**3.5A**	**705,034**	**720**	**439**
				(OP:SP7IVO)
*SP4GL	"	468,026	556	383

Portugal

CR6K	**A**	**9,948,634**	**3477**	**1154**
				(OP:CT1ILT)
CS2C	**14**	**6,788,048**	**2955**	**1142**
				(OP:OK1RF)
***CR7AJL**	**A**	**1,202,420**	**1237**	**590**
*CT1ELZ	"	127,820	305	220
***CT7AGZ**	**21**	**277,746**	**424**	**357**
*CT1DJE	"	157,634	304	269

Romania

YO2LEA	**A**	**1,403,467**	**1077**	**611**
YO3GNF	"	897,408	876	492
YR8I	**28**	**183,125**	**396**	**293**
				(OP:YO8BIG)
YR3ØA	"	159,194	369	274
				(OP:YO8AXP)
YO3FF	**21**	**290,988**	**424**	**354**
YO6UO	**7**	**747,136**	**668**	**449**
YO8BGE	**3.5**	**28,667**	**126**	**109**
YO5AJR	**1.8**	**89,300**	**250**	**190**
***YO5AXF**	**A**	**572,660**	**732**	**418**
*YO3FRI	"	551,946	588	402
*YO3ND	"	466,569	630	423
*YO3GFH	"	383,418	493	358
*YO4SI	"	289,852	467	311
*YO4AAC	"	222,390	450	315
*YO9CWY	"	189,158	360	271
*YO8BOD	"	171,351	306	241
*YP5C	"	162,702	339	262
*YO2LDU	"	140,286	308	227
*YO6HSU	"	94,736	218	191
*YO2QY	"	62,729	183	149
*YO7LYM	"	25,604	175	148
*YO4GVC	"	17,302	99	82
*YO4RST	"	14,134	82	74
*YO2LCP	"	13,685	84	85
*YO4CSL	"	8,253	64	63
**YO4GM*	*"*	*2,975*	*36*	*35*
*YO3FGO	"	2,325	32	31
**YO6ADW*	*"*	*55*	*5*	*5*
**YO3FFF*	*28*	*65,016*	*196*	*168*
***YO2CJX**	**"**	**17,019**	**101**	**93**
*YO9GVP	"	1,890	36	35
*YO3JV	"	1,764	39	36
***YO2IS**	**21**	**377,702**	**483**	**398**
*YO4TL	"	154,200	303	257
*YO4AJ	"	105,859	256	221
*YO8COQ	"	74,214	194	186
*YO5NY	"	71,600	192	179
*YO9HG	"	53,040	183	170
*YO2MCK	"	21,185	96	95
***YO3CBZ**	**14**	**68,376**	**196**	**168**
*YO4BEX	"	60,368	220	196
*YO4KCC	"	51,920	185	176
				(OP:YO4MM)
*YO6DMR	"	15,345	95	93
***YO2AQO**	**3.5**	**224**	**8**	**8**
***YO9RIJ**	**1.8**	**3,440**	**46**	**40**
YR8D	**AA**	**6,248,355**	**2594**	**1065**
				(OP:YO8TTT)
YQ6A	"	4,193,397	2214	919
				(OP:YO6BHN)
YO8SS	"	1,094,724	1021	564
YO7CVL	"	932,488	794	509
YP9W	"	395,010	564	385
				(OP:YO9WF)
YO5BRZ	"	106,600	232	200
YO5CUQ	*"*	*60,150*	*162*	*150*
YR8E	**28A**	**204,000**	**387**	**300**
				(OP:YO8RHM)
YO3LW	**21A**	**385,361**	**483**	**401**
YP5A	**7A**	**1,066,527**	**757**	**513**
				(OP:YO5CBX)
YO9BPX	*1.8A*	*1,275*	*26*	*25*
***YO5CRQ**	**AA**	**740,412**	**767**	**471**
*YO5OBA	"	43,746	166	138
*YO4FZX	"	20,295	114	99
*YO7AWZ	"	920	20	20
***YRØW**	**28A**	**14,274**	**84**	**78**
				(OP:YO9SW)
***YO5OHO**	**14A**	**1,824,075**	**1304**	**825**
***YO2NAA**	**7A**	**1,377,470**	**838**	**565**
***YO5LD**	**3.5A**	**361,200**	**506**	**344**
*YO8DOH	"	253,152	415	293
***YO2AQB**	**1.8A**	**28,930**	**139**	**110**

Sardinia

***ISØXDA**	**14**	**101,420**	**248**	**220**

Scotland

MM3N	**A**	**857,332**	**823**	**469**
				(OP:GM4SID)
GM2V	*21*	*430,807*	*625*	*403*
				(OP:GM3WOJ)
GM3YOR	**"**	**208,572**	**386**	**273**
GM3WUX	*14*	*162,486*	*408*	*306*
MMØAMW	**21A**	**350,574**	**453**	**357**
***GM4X**	**AA**	**2,138,340**	**1563**	**681**
				(OP:GM4WZG)
***GM4OSS**	**14A**	**224,636**	**492**	**356**
*GM4UYZ	"	6,090	71	70

Serbia

YT6W	**A**	**8,249,473**	**3255**	**1069**
YU5D	**28**	**39,618**	**168**	**142**
YT6A	**21**	**4,854,006**	**2220**	**1026**
				(OP:YU1KX)
YU7EE	*"*	*3,031,885*	*1793*	*835*
YT1A	*14*	*2,963,670*	*1866*	*886*
YT2ISM	**"**	**349,824**	**627**	**384**
YT4A	**3.5**	**656,358**	**679**	**417**
				(OP:YT1AA)
***YT8A**	**A**	**5,495,308**	**2524**	**974**
				(OP:YU1EA)
**YU9CF*	*"*	*181,035*	*298*	*243*
*YU1ED	"	94,284	270	194
***YT9W**	**28**	**352,044**	**577**	**396**
***YT4T**	**21**	**1,045,440**	**924**	**605**
*YU45DX	"	44,415	149	135
				(OP:YU1DX)
**YT7IM*	*"*	*16,050*	*82*	*75*
***YU7RQ**	**14**	**268,380**	**510**	**378**
***YU7D**	**7**	**524,718**	**488**	**369**
*YU1DX	"	174,930	280	238
***YUØA**	**3.5**	**586,497**	**660**	**411**
				(OP:YU1RA)
*YU5T	"	320,276	469	319
YT9X	**AA**	**7,348,308**	**2876**	**1074**
				(OP:YU1ZZ)
YT9A	"	3,909,048	2075	871
YU1CC	"	23,370	92	82
YT5W	**28A**	**874,368**	**938**	**576**
				(OP:YU1AU)
YT5A	"	831,630	940	570
				(OP:YT3W)
YU1EW	**21A**	**5,114,235**	**2169**	**1113**
YU7AV	**14A**	**5,577,871**	**2436**	**1103**
YT4W	**7A**	**3,541,835**	**1439**	**781**
				(OP:YU1DW)
YU1BFG	**3.5A**	**158,155**	**302**	**235**
				(OP:YU8A)
***YT2W**	**AA**	**3,734,962**	**1981**	**869**
*YU9ØIARU	"	2,846,208	1740	768
				(OP:YT2AAA)
*YU1LA	"	1,081,290	989	542
*YT5N	"	573,822	642	449
				(OP:YU7AF)
*YU1KT	"	318,388	522	332
*YU1ANO	"	4,455	50	45
***YU2FG**	**21A**	**2,171,586**	**1320**	**817**
*YT4B	"	1,312,710	971	658
				(OP:YT5M)
*YU1AHW	"	496,650	611	462
				(OP:YT2EA)
***YT2T**	**14A**	**2,705,599**	**1484**	**949**
*YU5C	"	1,063,132	951	602
*YU5M	"	514,090	683	509
***YT5CT**	**7A**	**1,600,463**	**875**	**601**
*YU2A	"	1,419,292	877	586
*YT3T	"	170,400	324	240
***YT1WA**	**3.5A**	**374,850**	**533**	**350**
*YU7YZ	"	287,672	438	308

Sicily

***IW9GRL**	**A**	**23,310**	**114**	**111**
***IF9/IT9PPG**	**21**	**1,402,080**	**1237**	**690**
*IT9LKX	"	433,143	574	447
***IT9NVA**	**14**	**2,091**	**42**	**41**
IT9RBW	**AA**	**2,971,252**	**1602**	**892**
II9W	*"*	*1,186,941*	*1014*	*609*
IT9IMJ	**28A**	**9,447**	**76**	**67**
***IT9DKI**	**AA**	**479,250**	**621**	**426**
***IT9RZU**	**28A**	**246,012**	**572**	**332**

Slovak Republic

OM5ZW	**A**	**10,271,460**	**3256**	**1158**
OM7RU	"	3,964,378	1994	869
OM6AL	"	1,308,732	1152	573
OM3IAG	"	880,065	781	477
OM3CND	"	53,244	166	153
***OM2VL**	**A**	**7,291,368**	**2802**	**1036**
*OM8AA	"	1,503,310	1168	629
*OM5WW	"	1,329,048	1081	586
*OM2MM	"	1,271,820	823	564
*OM8ON	"	860,379	775	507
*OM3R	"	698,964	754	471
				(OP:OM3CFR)
*OM7AG	"	528,184	683	412
*OM2DT	"	472,680	569	404
*OM9OT	"	423,280	541	370
				(OP:OM3PA)
*OM3BA	"	353,020	517	380
*OM8LM	"	274,560	444	312
*OM7SR	"	208,208	387	286
*OM7ZM	"	199,104	345	272
*OM4AY	"	153,863	307	251
*OM7AX	"	113,029	274	241
*OM4DU	"	56,320	178	160
*OM5MX	"	33,804	119	108
*OM2XA	"	18,868	120	106
*OM5AA	"	10,725	82	75
***OM8FF**	**21**	**139,192**	**291**	**254**
*OMØWR	"	90,459	231	207
**OM8HG*	*14*	*57,186*	*180*	*162*
***OM3ZWA**	**7**	**1,519,600**	**985**	**580**
*OM3CDN	"	309,927	409	309
*OM8VL	"	91,884	246	186
***OM6TX**	**3.5**	**31,920**	**130**	**112**
***OM4WW**	**1.8**	**28,625**	**156**	**125**
OM7PY	**28A**	**21,534**	**106**	**97**
OM8DD	**14A**	**3,628,740**	**1811**	**921**
***OM6RM**	**AA**	**2,229,703**	**1455**	**697**
*OM5XX	"	1,705,559	1194	697
**OM2ØOTC*	*"*	*978,576*	*843*	*551*
				(OP:OM5CD)
*OM5UM	"	142,740	311	244
*OM3COR	"	47,270	187	163
*OM7YC	"	20,140	82	76
***OM7RM**	**21A**	**28,792**	**132**	**118**
***OM4O**	**14A**	**316,389**	**515**	**401**
				(OP:OM3NI)

Slovenia

S53A	**A**	**7,520,106**	**2911**	**957**
S57C	"	4,382,400	2177	830
S55M	"	4,123,196	1908	847
S58MU	"	3,853,920	1929	868
S52AU	"	760,960	690	464
S52C	"	295,138	526	346
S5ØK	**21**	**4,510,264**	**2063**	**958**
S51TA	**14**	**4,809,402**	**2243**	**1054**
S59ØIARU	"	588,190	682	449
				(OP:S51FB)
S51F	**7**	**3,407,346**	**1419**	**738**
S51ZJ	"	1,529,455	936	565
S51RE	"	273,429	297	247
S57Z	**3.5**	**1,049,832**	**863**	**504**
***S5ØA**	**A**	**5,841,600**	**2412**	**960**
*S51I	"	49,572	175	153
***S59N**	**14**	**996,324**	**1077**	**609**
*S57YK	"	93,696	295	244
*S54G	"	5,590	70	65
***S51J**	**7**	**410,848**	**493**	**347**
*S51DX	"	361,504	497	316
***S59D**	**1.8**	**200**	**11**	**10**
S55T	**AA**	**9,009,902**	**2943**	**1201**
				(OP:S57AL)
S53MM	"	8,638,956	2822	1116
S59ABC	"	8,627,636	2700	1207
				(OP:S51DS)
S5ØR	"	5,687,808	2361	966
S52ZW	"	4,513,516	1957	974
S58Q	"	1,202,222	933	553
S57S	"	234,780	394	273
S51NM	"	220,980	353	290
S57AW	**21A**	**5,704,300**	**2269**	**1124**
S57DX	**14A**	**4,188,950**	**2015**	**995**
S52GP	"	345,280	539	415
S53F	**7A**	**2,913,129**	**1321**	**751**
S56X	"	2,786,844	1300	719
S59A	"	2,320,708	1171	676
S58M	"	556,722	555	394
***S57KM**	**AA**	**1,715,472**	**1378**	**627**
***S53V**	**28A**	**256,743**	**434**	**333**
***S54X**	**14A**	**941,488**	**798**	**652**

Spain

EF5Y	**A**	**6,099,202**	**2741**	**982**
				(OP:EA5FR)
EA3GBA	"	1,117,062	1090	542
ED7P	**21**	**315,464**	**406**	**376**
EF1A	**14**	**762,910**	**800**	**535**
				(OP:EA1XT)
EA3CX	**7**	**2,779,923**	**1281**	**699**
***EF2A**	**A**	**5,768,400**	**2528**	**912**
				(OP:EA2OT)
*EA1VT	"	607,621	735	427
*EA1JO	"	525,150	683	450
*EA5DD	"	133,340	303	226
*EA4OA	"	32,186	159	133
*EA1AF	"	31,312	127	103
*EA1CM	"	24,892	106	98
*EA4FLY	"	225	9	9
*EA4UB	"	36	4	4
***ED5W**	**21**	**825**	**25**	**25**
				(OP:EA5BB)
***EA5IIK**	**14**	**316,996**	**527**	**388**
*EA1ND	"	112,470	293	230
*EA3BCK	"	805	23	23
***EA2HW**	**7**	**110,010**	**232**	**190**
*EA4MZ	"	103,899	203	177
ED5O	**AA**	**3,703,160**	**1971**	**860**
				(OP:EC5CR)
EF5BM	"	602,430	773	467
				(OP:EA5BM)
EA7RM	"	165,894	353	258
EA4GLJ	"	88,560	243	205
EF5R	**28A**	**123,970**	**338**	**245**
				(OP:EA5BWR)
EA3CEC	"	817	18	19
EA3AKA	**1.8A**	**14,337**	**94**	**81**
***ED2A**	**AA**	**1,712,752**	**1221**	**641**
				(OP:EA2CW)
*EB1RL	"	225,630	425	327
*EB5CS	"	95,304	270	209
*EB2RA	"	92,169	204	171
*EA2GP	"	37,960	144	130
*EA4ESP	"	2,090	39	38
***EA7GV**	**28A**	**18,067**	**108**	**89**
*EB7KA	"	12,800	114	100
*EA4XT	"	1,100	23	22
***EA3VN**	**21A**	**362,619**	**522**	**387**
*EA3NO	"	119,140	260	230
***EA7OR**	**14A**	**120,694**	**291**	**259**
*EA2GM	"	7,728	61	56

Sweden

SM3C	**A**	**2,186,470**	**1453**	**715**
				(OP:SM5CCT)
SM5CCE	"	894,208	853	499
SMØS	"	653,400	693	440
				(OP:SM5BAX)
SM6BGA	"	243,236	395	292
SM5CZQ	"	181,388	330	331
SF5FF	**21**	**229,508**	**363**	**317**
				(OP:SM5DRW)
SD3A	**14**	**7,006**	**61**	**62**
				(OP:SM3FJF)
***SM2T**	**A**	**2,409,664**	**1669**	**736**
				(OP:SM2EZT)
*SE4E	"	1,888,908	1452	678
				(OP:SM4DQE)
*SC3N	"	1,800,864	1427	666
				(OP:EA8CN)
*SM5CSS	"	1,023,511	978	523
*SI5Y	"	904,155	953	553
				(OP:SM5BKK)
*SM7CIL	"	533,408	603	422
*SM6NJK	"	461,006	682	442
*SE5L	"	409,762	588	422
				(OP:SM5ALJ)
*SM5S	"	274,026	464	327
				(OP:SM5SIC)
*SMØBSO	"	233,840	413	316
*SM6GBM	"	219,240	390	290
*SM5KQS	"	149,624	332	236
*SM5DXR	"	127,912	335	236
*SM5ACQ	"	90,516	275	228
*SF3A	"	70,092	209	177
				(OP:SM3CER)
*SMØY	"	58,764	205	177
				(OP:SMØOY)
*SD6M	"	19,964	140	124
				(OP:SA6BGR)
*SM5BJT	"	12,240	89	80
**SM7ATL*	*"*	*8,107*	*68*	*67*
***SM6TOL**	**21**	**62,124**	**194**	**186**
*SM6EWB	"	54,981	149	123
***SA6G**	**14**	**1,187,360**	**1051**	**656**
***SM5MX**	**7**	**866,614**	**660**	**478**
*SM6Q	"	424,196	467	346
SJ2W	**AA**	**10,243,926**	**3225**	**1254**
				(OP:SM2LIY)
SEØX	"	4,331,562	2123	978
				(OP:SMØMDG)
SCØN	"	2,295,612	1684	748
				(OP:SMØNCS)
SM6BGG	"	522,904	557	401
7S9ØIARU	"	121,765	262	245
				(OP:SM6JSM)
8SØW	"	111,244	236	203
				(OP:SMØNJO)
SM6NOC	"	93,633	212	177
SM6CNN	**21A**	**1,111,242**	**812**	**678**
SM5CEU	**14A**	**909,580**	**819**	**623**
SM7GIB	*7A*	*117,810*	*249*	*198*
***SM3OMO**	**AA**	**688,228**	**713**	**493**
*SM2BJS	"	509,411	713	427
*SM5DVS	"	358,125	546	375
*SE6N	"	296,088	445	312
				(OP:SA6AXR)
*SK5LW	"	127,765	332	253
				(OP:SM5PBT)
**SF5X*	*"*	*65,048*	*208*	*173*
				(OP:SM5EFX)
***SM6IQD**	**21A**	**13,416**	**90**	**86**

Switzerland

HB9DUS	**A**	**27,195**	**119**	**105**
HB9TXE	*"*	*26,112*	*150*	*128*
HB9CQL	"	16,600	86	83
HB9FAQ	**14**	**112,098**	**279**	**238**
***HB9ARF**	**A**	**1,597,120**	**1292**	**620**
*HB9LF	"	14,630	120	95
				(OP:HB9CRV)
*HB9AYZ	"	9,198	85	73
***HB9DOS**	**7**	**2,555**	**38**	**35**
HB9ØIARU	**AA**	**7,020,016**	**2533**	**1082**
				(OP:HB9CAT)
HB9DHG	"	1,977,087	1371	651
HB9DQL	"	741,502	731	458
HB9EHJ	"	41,480	150	136
HB2T	**21A**	**1,232,777**	**1109**	**589**
				(OP:HB9BUN)
HB9FBS	**1.8A**	**16,605**	**107**	**81**
***HB9FBM**	**AA**	**369,684**	**531**	**378**
*HB9/RC3C	"	198,320	377	268
**HB9ELD*	*"*	*6,000*	*61*	*60*
***HB9CZF**	**7A**	**17,840**	**80**	**80**

Ukraine

UZ2M	**A**	**11,101,520**	**3928**	**1208**
				(OP:URØMC)
UV5U	"	2,926,560	1722	840
				(OP:UX1UA)
UT2UB	"	1,940,211	1345	721
UR7QC	"	1,157,776	961	538
UR4IZ	"	1,156,135	1055	535
UR5WX	"	1,050,300	980	540
UX3HA	"	553,080	764	440
UT5EDU	"	461,472	570	418
US7IM	*"*	*82,256*	*228*	*194*
UT6EE	"	48,081	152	141
US3LX	*"*	*43,332*	*145*	*138*
US7WW	"	38,170	128	110
UR5AO	"	24,100	105	100
UR4LBL	"	11,446	60	59
UTØUM	"	6,882	69	62
USØZK	"	2,829	45	41
UX5UO	"	80	8	8
UYØZG	**21**	**1,145,052**	**902**	**612**
UR6IJ	"	742,716	683	529
UR7EN	*"*	*205,923*	*350*	*249*
USØUX	"	46,426	148	139
UT4ZG	**14**	**1,479,062**	**1321**	**698**
UZØU	"	1,473,524	1262	659
				(OP:UY5ZZ)
US4IRT	"	141,494	314	269
UT3UV	"	4,575	63	61
UX3IT	"	65	5	5
UT5EO	**1.8**	**99,990**	**277**	**202**
UT6UD	"	10,132	81	68
***UR2Y**	**A**	**6,190,173**	**2833**	**1023**
				(OP:US2YW)
*UW5Q	"	4,389,518	2217	953
				(OP:UR3QCW)
*UW7M	"	1,534,842	1199	661
				(OP:UR3MP)
*UR5MM	"	1,148,576	966	572
*UXØKR	"	1,081,668	998	553
*UY2UQ	"	1,067,661	1116	567
*UT8IM	"	932,352	1038	512
*UYØCA	"	929,664	984	538
*UY5AR	"	852,306	756	546
*UR7VA	"	810,438	850	586
*UR5GAW	"	674,730	826	459
*UX3IO	"	667,147	718	481
*UT5UN	"	632,736	594	416
*UV1IW	"	632,192	787	449
*UX4E	"	599,326	676	481
*UX1CL	"	553,656	667	408
*US7IB	"	502,708	676	436
*UW7RV	"	447,733	569	403
*UT5T	"	433,504	593	368
*UY5TE	"	421,872	631	376
*UT1V	"	318,150	546	350
				(OP:US1VM)
*UT2QQ	"	255,640	473	308
**UT3UBR*	*"*	*221,508*	*391*	*293*
*UT4UP	"	220,220	367	286
*UR8GX	"	214,616	387	278
*UR5ZTH	"	184,759	410	277
*UT3IA	"	171,348	349	262
*UR5EPV	"	167,580	365	252
*UX7UU	"	155,740	332	260
*UTØCK	"	137,085	341	247
*UR5UJ	"	127,370	296	235
*UX6IB	"	126,040	259	230
*UV3RT	"	125,190	291	234
*UR6LAF	"	116,402	295	242
*UX1CW	"	105,690	234	195
*UT8UD	"	105,434	297	238
*UT3UZ	"	85,932	201	198
*UT5EPP	"	84,630	283	210
*UR4LIN	"	51,354	191	162
*US8UA	"	49,077	206	171
*US3IY	"	45,760	146	130
*UW7CN	"	43,818	151	134
*UR5CC	"	34,776	121	108
*UT1UW	"	31,122	130	114
*UTØMF	"	24,360	116	116
*UT5UIA	"	23,154	106	102
*UT2HM	"	17,548	87	82
*UR7QM	"	17,390	101	94
*UT7VR	"	12,975	79	75
**UR5IRM*	*"*	*12,240*	*91*	*85*
*UY7IS	"	9,920	88	80
**UR5EIT*	*"*	*9,840*	*86*	*82*
*DØY	"	8,201	62	59
*US5UCC	"	7,812	62	62
*UR5WFP	"	3,864	48	42
*UX6IR	"	800	20	20
***UT1DX**	**28**	**47,056**	**155**	**136**
*UR3IQO	"	5,350	54	50
*UT7XT	"	108	6	6
***UT3EK**	**21**	**478,883**	**556**	**443**
*UR2VA	"	92,990	197	170
*US8IM	"	82,179	243	207
*US5LO	"	67,728	196	166
*UT5CL	"	50,402	171	158
*UT7AW	"	42,300	147	141
*UT7MR	"	11,205	91	83
***UX7U**	**14**	**560,196**	**719**	**494**
				(OP:UX7UA)
*UW2Q	"	545,905	656	505
				(OP:UR6QS)
*UT3EV	"	525,048	697	501
*UT2DW	"	415,247	572	433
*UT3SO	"	300,251	521	413
*UX7QD	"	248,200	557	365
*US3QQ	"	224,649	398	327
*UR8QR	"	212,310	398	337
*UXØHO	"	174,291	414	327
*UR5VR	"	37,800	177	150
*US1UU	"	19,552	100	94
*UY2ZZ	"	19,305	130	117
*UT4UJQ	"	1,215	27	27
*UT7UE	"	180	10	10
*UR6AJ	"	27	3	3
***UT8AS**	**7**	**835,655**	**692**	**485**
*UR1YAA	"	27,499	115	107
***UT7NW**	**3.5**	**23,625**	**121**	**105**
UR7GO	**AA**	**8,681,250**	**2971**	**1250**
UW3U	"	7,465,794	2763	1193
				(OP:UT7UJ)
UW1M	"	7,113,328	2865	1087
EN4U	"	6,972,210	2531	1085
ENØU	"	6,341,376	2609	1077
				(OP:UT5UDX)
UT7CR	"	1,630,662	1143	682
UY5VA	*"*	*1,273,902*	*1149*	*619*
UR8RF	"	813,241	885	517
UT5ECZ	"	783,545	704	427
UR5E	"	15,370	60	58
				(OP:UR5EDX)
UR7HN	*"*	*1,023*	*30*	*31*
UZ4I	**21A**	**2,989,044**	**1692**	**948**
				(OP:UR5IFM)
UW7LL	"	2,215,058	1281	821
UT7E	"	1,947,939	1257	777
				(OP:US3EO)
UT2II	"	866,852	785	581
UT1AA	**14A**	**1,343,944**	**1210**	**721**
UT2PX	"	780,388	757	593
UTØRM	**7A**	**188,811**	**331**	**243**
UW5W	**3.5A**	**680,559**	**658**	**451**
***UT4LW**	**AA**	**4,379,875**	**2300**	**947**
*UR6EA	"	3,727,500	2020	852
*UX1UX	"	1,737,765	1376	657
*UV7V	"	1,668,720	1264	680
				(OP:UX1VT)
*UT2IO	"	1,428,210	1251	630
*UR3CMA	"	1,003,572	1033	549
*UR5IFB	"	479,360	636	428
*UX3IW	"	443,336	505	302
*UT8IT	"	400,464	446	412
*UV3QF	"	397,461	550	367
*UY5ZI	"	256,795	363	253
*UT4XU	"	162,322	353	277
*UX1IL	"	141,723	301	261
*US9PA	"	112,463	252	211
*US6EX	"	109,180	254	206
*UT8EL	"	90,873	284	207
**UT2HC*	*"*	*51,620*	*166*	*145*
*UT4UB	"	43,043	163	143
*UT8EU	"	40,986	160	138
*UX4CR	"	20,995	98	95
*UY5QZ	"	7,668	57	54
**UT5UX*	*"*	*5,520*	*46*	*46*
*URØIQ	"	2,430	30	30
***USØHZ**	**21A**	**403,806**	**509**	**403**
*UXØFF	"	47,952	166	144
***UX1AA**	**14A**	**2,509,976**	**1491**	**931**
*UY5QJ	"	173,472	306	278
*UT1IM	"	54,936	174	168
***UR5LAM**	**7A**	**1,469,344**	**956**	**584**
*UR5FCM	"	204,072	334	264
*UR7MZ	"	87,210	186	170
*UT3WX	"	54,648	181	138
***UT7XX**	**3.5A**	**1,922**	**32**	**31**

***UW1U**	1.8A	25,515	127	105
				(OP:UT7UA)
*UR4CYT	"	2,555	41	35
				(OP:UR3VHR)

Wales

GW7O	A	1,383,915	1197	611
				(OP:GW3SQX)
***GWØBBO**	A	86,976	252	192

OCEANIA

Australia

VK2GR	A	385,890	387	285
VK4NM	"	288,610	393	245
VK3GDM	"	1,240	21	20
VK4AFU	28	5,588	47	44
VK6SMK	7	1,995	19	19
***VK4TT**	A	16,226	70	61
***VK8AV**	14	87,381	181	171
*VK5LJ	"	18,798	86	78
VK3DGN	AA	175,278	274	223
***VK7CW**	AA	102,312	198	168
*VK3MEG	"	5,250	46	42
*VK6WX	"	585	14	13

East Malaysia

***9M6ZIM**	A	91,640	214	145

Fiji

***3D2KM**	A	269,477	386	247
				(OP:W6ZL)

Hawaii

KH7XX	A	12,449,866	3365	1111
				(OP:N2NL)
WH7M	"	6,089,746	2288	838
				(OP:K1YR)
AH7T	"	2,584,318	1308	649
				(OP:N6MI)
WH7W	"	217,554	312	202
KH6Y	7	43,524	110	78
***KH6CJJ**	A	746,640	672	340
*AH6KO	"	454,376	489	257
WH6R	AA	1,860,310	1231	527
KH6TU	"	936,509	722	379
				(OP:AD6E)
NH6Y	"	28,336	116	92
***KH6FP**	AA	87,381	177	133

Indonesia

YB2TX	A	637,749	549	371
YB3IZK	"	17,228	81	73
***YB4IR/7**	A	417,956	461	308
*YD4IRS	"	183,529	282	223
*YB8HZ	"	122,464	218	178
*YBØCOU	"	75	5	5
***YB2FWQ**	21	3,162	34	34
*YB1TIA	"	420	15	15
***YB8TK**	14	39,849	130	111
**YB2WWW/5*	7	287,763	243	213
YC1DOL	AA	559,988	537	356
***YC1BJX**	AA	505,579	495	347
*YE1GD	"	113,122	216	163
*YB1UUN	"	8,892	54	52
***YE3AA**	28A	22,596	94	84
				(OP:N1IP)
***YC8ROP**	21A	16,709	82	77
*YB2ECG	"	940	20	20
***YB1AR**	14A	81,162	176	167
***YB2TJV**	7A	7,070	36	35

Mariana Islands

AHØK	7	750,212	489	274
				(OP:OH7WV)
***KHØ/JH1OLB**	A	21,750	89	87

New Caledonia

FK8DD	A	1,422,993	1004	429

New Zealand

ZL2JU	A	69,112	129	106
ZL1GO	28	169,242	289	201
ZL1AIH	21	1,856,688	1125	564
***ZM1M**	14	12,672	72	66
				(OP:ZL1BBW)
ZM2IO	AA	6,718,096	2184	836
				(OP:ZL3IO)
***ZM3T**	7A	130,938	176	139
				(OP:W3SE)

Philippines

***DU7HF**	A	147	7	7

Samoa

***5W1SA**	28A	502,335	570	305

SOUTH AMERICA

Argentina

LU6UO	A	841,257	665	443
LU4FPZ	"	132,864	242	192
LO5D	28	1,441,240	914	548
				(OP:LU8EOT)
LW6DG	3.5	98,298	147	129
***LW1EUD**	A	277,770	361	282
*LU4EG	"	205,156	310	238
*LU5FF	"	29,376	106	96
***LU1ICX**	28	989,145	738	459
**LW8DQ*	"	166,222	266	217
*LU8DCF	"	1,386	22	22
***LT5I**	21	109,746	212	182
				(OP:LU1II)
LU9MDH	AA	40,221	128	109
LU6QI	"	330	11	11
LU3CW	28A	83,700	195	150
***L33M**	AA	985,157	719	461
				(OP:LU3MAM)
*LV1F	"	104,838	221	173
				(OP:LU4FTA)
*LU1BJW	"	396	12	12
***LU7HN**	7A	206,521	213	181

Aruba

P49Y	7	5,897,688	1364	744
				(OP:AE6Y)
***P4/K1KG**	A	386,104	434	289

Brazil

PY2YU	A	8,605,840	2627	970
PY4YY	"	1,302,070	1080	418
PP5JY	"	121,830	228	186
PY3AU	21	102,420	197	180
PS2T	7	1,377,090	559	429
				(OP:PY2ZEA)
PY2FCL	"	58,695	116	105
PY5XH	3.5	2,832	25	24
***PY1NX**	A	5,662,656	2073	783
*PY2NY	"	3,251,824	1462	668
*PQ7MM	"	186,186	280	231
*PT2AW	"	62,967	157	139
*PY4TW	"	43,920	135	120
*PY4ARS	"	28,786	81	74
*PV8AA	"	12,288	73	64
				(OP:PV8DX)
***PX2F**	28	1,708,138	1029	569
				(OP:PY2PT)
**ZX1X*	"	733,788	633	396
				(OP:PY1MX)
*PY2ZW	"	13,090	70	70
*PY1MM	"	2,573	31	31
**PV8DX*	"	18	3	3
***PW2F**	21	538,559	493	379
				(OP:PY2NA)
*PY2QI	"	21,060	92	81
*PP2CC	"	20,560	89	80
***PS7AW**	14	4,480	41	40
***PR7AB**	7	769,536	429	334
*PY4XX	"	388,368	287	248
***ZZ7ZZ**	3.5	259	7	7
PR5W	AA	3,379,200	1246	704
				(OP:PY5FB)
PY2KJ	"	2,213,820	1154	588
PY4HO	"	1,726,992	949	536
ZX2F	"	1,121,480	766	460
				(OP:PY2FN)
PP5AX	"	442,728	428	286
PP5UP	"	418,470	399	290
PY4VB	"	166,743	219	191
PY2IU	"	23,144	103	88
PT2NP	"	510	11	10
PP5NY	28A	182,744	301	212
PX2A	21A	5,943,432	2131	958
				(OP:PY2EL)
ZV2K	14A	415,452	429	356
				(OP:PY2SHF)
PY2RN	3.5A	19,080	60	60
***PR3A**	AA	3,954,184	1579	788
*PR9M	"	2,988,225	1304	699
				(OP:PY9MM)
*PP1CZ	"	1,848,648	1095	591
*PY4ZO	"	300,263	363	283
*PY4LH	"	228,932	362	242
*PY1ZV	"	23,712	89	76
*PY7ZY	"	6,255	48	45
*PY5TJ	"	2,523	31	29
*PU4YJS	"	272	16	16
*PU1NAF	"	48	4	4
*PY1TTN	"	3	1	1
***ZW8T**	28A	932,030	727	458
				(OP:PS8BR)
*PY2XC	"	449,939	497	323
**PY3CAL*	"	211,992	307	242
*ZW1M	"	202,194	298	239
				(OP:PY1MK)
*PY2RH	"	15,318	77	69
*PU1YGM	"	2,752	33	32
*PY1NSC	"	2,088	31	29
***PY1NB**	21A	26,602	100	94
***PY2VM**	14A	45,384	132	124
***PY1KS**	7A	2,365,845	744	545
*PY1MT	"	1,275	16	17

Chile

CE3CT	A	4,307,202	1745	747
				(OP:LU1AEE)
CE3DNP	21	733,194	613	414
***CE3KHZ**	A	25,502	108	82
CE2MVF	28A	515,619	520	339
***XQ3UP**	AA	60	6	6
				(OP:XQ7UP)
**CE1TBN*	"	1	1	1
***CE3AA**	14A	1,281,675	765	575
				(OP:XQ4CW)

Colombia

HK1R	21	8,721,150	2736	1097
5K4R	14	6,333,295	2252	965
				(OP:N4RR)
***HK3ZD**	A	82,140	177	148
HK1X	AA	378,630	417	315

Curacao

***PJ2T**	A	7,597,701	2453	849
				(OP:WI9WI)

Ecuador

***HC2AO**	AA	38,610	121	110

French Guiana

***FY5FY**	14	6,000,810	2130	951

Paraguay

***ZP9MCE**	AA	181,245	297	215

Peru

OA4SS	A	4,116,924	1698	714
***OA1F**	7	1,872	18	18

Uruguay

***CW5W**	A	6,310,091	2081	857
CX2BR	AA	2,279,640	1162	628
CX7ACH	7A	8,200	43	41
***CX9AU**	AA	1,806,399	943	541

Venezuela

YV6BXN	14	86,154	182	166
***YV8AD**	A	63,918	155	134
*YY5LAY	"	36,960	107	96
***YV5AAX**	14	319,488	351	312
***YV4YC**	7	804,034	449	322
***YV4NN**	AA	37,524	118	118
*YV5JGO	"	2,166	19	19
***YV1KK**	28A	1,462,993	973	511

QRP

HG3M	A	1,936,988	1395	709
				(OP:HA3MY)
TM3T	"	1,650,496	1410	629
				(OP:F5VBT)
UC7K	"	1,583,064	1254	648
DF5RF	"	1,289,270	1089	563
VE3VN	"	1,255,980	812	484
UX2MF	"	1,236,543	986	583
LA/LY5G	"	1,208,010	1052	601
UW4E	"	1,135,008	1085	563
				(OP:UT7EZ)
N7IR	"	957,933	817	459
KT8K	"	650,702	635	377
W6QU	"	638,144	635	416
				(OP:W8QZA)
Z32ZM	"	422,408	511	397
UN7EG	"	391,020	410	285
UX8IX	"	379,857	567	381
G3YMC	"	375,945	640	355
4O4SM	"	367,164	614	372
K2YGM	"	335,824	405	278
N4CW	"	329,902	401	313
K8CN/1	"	309,602	403	283
UX1VX	"	271,755	416	305
LY3G	"	267,121	487	323
OK6OK	"	248,927	451	301
JH1OGC	"	222,138	332	246
OK2BLD	"	211,410	430	290
G4FPA	"	206,496	416	288
IV3DRP	"	200,852	384	298
DL4XU	"	199,980	427	303
EA7AAW	"	198,650	397	290
DL8TG	"	196,742	402	299
UR7GP	"	196,020	462	297
DF1SZ	"	194,388	406	291
K7HBN	"	182,532	302	246
K4OSO	"	171,570	284	210
LB1JG	"	171,536	421	284
GM4UBJ	"	141,093	358	257
UT4UFZ	"	135,296	274	224
DL1RNN	"	132,933	272	219
EA1GT	"	131,298	336	237
VE3KQN	"	108,066	217	166
NA5NN	"	107,653	241	169
				(OP:W5UE)
DF2WF	"	103,488	283	231
DL3HQN	"	98,928	280	216
7K1CPT	"	96,660	225	180
WA8REI	"	90,479	203	173
RA3DJA	"	89,440	278	208
IK3TZB	"	84,710	246	197
KE6K/7	"	82,302	262	174
RX1CQ	"	79,856	221	184
N8BB	"	79,278	189	146
KEØG	"	77,121	213	171
HA5BA	"	75,768	192	164
JR1UJX	"	65,952	210	144
DH5MM	"	64,558	192	169
NU7Y	"	63,960	257	164
RA3EA	"	61,415	214	173
DK5CF	"	56,700	242	175
RV3DBK	"	55,800	235	186
DL2BIS	"	52,323	207	163
W3IUU	"	50,416	148	137
K1SX	"	48,608	138	112
ON7CC	"	47,716	182	151
UA3YDI	"	45,696	158	136
OM3CUG	"	43,292	143	137
PC5D	"	41,340	194	156
AC7AF	"	39,087	154	129
JA9MAT	"	35,298	125	106
9A/DF2AJ	"	34,715	153	131
SM7RYR	"	34,578	190	153
UT5EOX	"	32,109	148	139
UA7G	"	30,366	147	126
EA2DVR	"	28,196	116	106
N7RCS	"	25,480	166	104
KØTC	"	23,540	125	107
YBØANN	"	21,606	98	78
K2QO	"	20,774	100	94
NO2D/Ø	"	20,332	108	92
YO3FVR	"	19,570	113	103
DK7OG	"	19,504	117	106
JN3DMJ	"	17,025	111	75
EA3HCJ	"	16,585	117	107
OM6SA	"	15,795	90	81
DL2LFH	"	14,976	104	96
EA2NA	"	14,279	126	109
OK1NF	"	13,968	111	97
W4UT	"	13,650	73	65
VA3RKM	"	12,210	75	66
VE3AYR	"	12,024	75	72
W4GDG	"	12,008	88	76
K6III	"	11,461	74	73
W1SFR	"	11,304	77	72
PAØRBO	"	11,288	98	83
DHØJAE	"	11,256	90	84
DL6MWG	"	8,687	83	73
PA9CW	"	8,505	92	81
DL3BVA	"	8,296	68	68
RØJF	"	7,371	69	63
WB9QAF/Ø	"	6,649	78	61
JM1KLO	"	6,000	64	48
NV1W	"	5,832	59	54
RU7KD	"	5,829	75	67
KN1H	"	5,500	55	55
AF9J	"	5,050	60	50
N4AU	"	4,830	42	42
M3JAC	"	4,717	54	53
UAØSBQ	"	4,592	43	41
KS4X	"	3,996	38	37
N4RAY	"	3,900	47	50
SM3DFM	"	3,774	52	51
W7TX	"	2,550	32	30
JH1RDA	"	2,479	44	37
M1K	"	2,365	47	43
PA1B	"	2,205	50	45
EA6ZS	"	2,184	43	42
SP8LXE	"	2,091	43	41
ADØBI	"	1,908	40	36
RQ7R	"	1,786	39	38
WA8AXF	"	1,664	35	32
W2JEK	"	1,254	24	22
F5VHP	"	1,148	29	28
AD4IE	"	1,134	21	21
EA4CU	"	900	25	25
9M2MDX	"	893	18	19
YO4HHP	"	744	25	24
VA7AD	"	663	18	17
VU3PRH	"	561	17	17
JE1ILP	"	476	15	14
RZ9W/3	"	475	19	19
JG1BGT	"	220	10	10
JR6KBF	"	165	13	11
PY2ZQ	"	72	8	8
UR3QOD	"	66	6	6
KZ5OM/6	"	40	5	5
DG3SBM	"	2	2	2
RU7A	28	93,808	277	208
YU5W	"	52,326	167	153
				(OP:YU1QW)
PS7HD	"	42,360	145	120
JQ1NGT	"	12,246	118	78
K2GMY/6	"	7,191	59	51
RV9YK	"	3,977	43	41
DL8MBS	"	3,927	61	51
VU2LYX	"	3,268	39	38
LZ2OQV	"	2,304	32	32
KE7TEK	"	684	19	19
				(OP:W9CF)
SP4GFG	"	608	20	19
YO4LHR	"	483	22	23
G3ZNR	"	399	24	19
JK1VOZ	"	216	15	12
JA1GZK	"	180	10	10
R7RF/6	"	120	10	10
9M6ZAE	"	3	1	1
OK7CM	21	397,554	454	383
ZS6DX	"	145,644	240	212
PG2AA	"	140,896	300	259
KA7T	"	134,500	328	250
RU3XW	"	126,444	283	246
JR1NKN	"	104,832	236	208
E21AOY	"	104,448	238	204
DL2TM	"	85,056	216	192
WA6FGV	"	82,560	238	192
EI4II	"	77,027	221	197
YO6EX	"	66,898	179	166
RW3AI	"	59,475	206	183
RA3XEV	"	47,233	171	149
JR2EKD	"	27,248	112	104
PS7DX	"	23,584	93	88
OH2ID	"	19,190	107	101
W5NZ/4	"	15,834	89	87
N6HI/7	"	8,568	56	56
WP4F	"	5,980	52	52
UA1CAK	"	5,850	46	45
RN4AO	"	5,478	73	66
DH6YMC	"	5,400	56	54
JF8LPB	"	2,844	40	36
JM2RUV	"	1,080	20	20
KB5JO	"	377	13	13
JA1POS	"	25	5	5
JA5INF	"	1	1	1
JS1SDU/3	"	0	3	3
HG72QRP	14	490,504	589	461
				(OP:HA5MA)
US5VX	"	371,743	513	421
SBØA	"	365,940	642	428
				(OP:SMØLPO)
RW9RN	"	156,408	256	228
HA7MW	"	136,947	257	239
LZ1AQ	"	104,860	284	245
KG4IGC	"	82,519	203	179
E77T	"	81,474	247	222
IN3HUU	"	49,612	175	158
NE6M	"	41,785	171	137
II5E	"	40,572	185	161
				(OP:IZ5ZCO)
KQ7M	"	33,670	164	130
				(OP:KØMP)
KP4CPC	"	31,482	119	106
UA3PP	"	26,790	161	141
SP6BXM	"	23,450	149	134
G4IKR	"	13,289	103	97
UR5EFL	"	13,230	111	98
JE1CAC	"	12,264	75	73
OK6D	"	11,040	93	92
IN3YKS	"	9,373	97	91
YO3JW	"	2,365	44	43
R2MA	"	2,280	42	40
M3PSK	"	1,023	34	31
GW3R	"	868	29	28
				(OP:GØDCK)
VK6VT	"	833	17	17
JF3ROH	"	225	9	9
JG3EHD	"	60	5	5
UT7DU	"	49	7	7
UA1CEG	"	9	3	3
M1BUU	"	0	1	1
F/OM2ZA	7	539,784	510	378
UX5UU	"	385,320	425	338
UY7LM	"	318,825	416	325
YO8RIX	"	169,824	324	244
SP6EIY	"	120,000	242	192
IZ2JPN	"	101,970	248	198
IW3ILM	"	90,288	228	176
N2JNZ	"	74,106	145	138
DJ3GE	"	23,653	129	109
JM1XTB	"	9,048	57	52
NZ3O	"	7,738	55	53
LY5Q	"	6,930	55	55
W8NNC	"	6,510	77	62
JM1DPL	"	5,400	32	30
RD1A	"	3,510	42	39
YB2LSR	"	560	10	10
E7ØA	3.5	275,415	435	305
EE3X	"	150,975	289	225
				(OP:EA3KX)
UT5UUV	"	69,290	215	169
UT5DJ	"	56,100	185	150
IKØVVE	"	22,880	117	104
YL3FW	"	7,280	62	56
AA1CA	"	1,040	28	26
HA5NB	1.8	34,845	154	115
S52P	"	34,542	155	114
S53AR	"	16,548	103	84
HB9CPS	"	15,908	101	82
9A4AA	"	1,736	32	28
MØCKE	"	1,260	29	28
S59GS	"	8	2	2
RA3AN	AA	2,059,596	1430	743
F/E72T	"	1,919,820	1108	653
OU2M	"	1,813,032	1279	676
				(OP:DK3WE)
N3CZ/4	"	946,360	754	472
SDØT	"	858,648	837	532
				(OP:SMØTHU)
KE8M	"	713,210	613	365
YU1LM	"	668,670	747	465
NE5LL	"	529,620	590	390
				(OP:N1CC)
US2IZ	"	373,474	592	353
RUØLAX	"	264,600	363	270
RD3ARU	"	257,866	443	326
JK1TCV	"	242,000	363	275
SG5W	"	194,670	360	270
				(OP:SM5IMO)
DJØMY	"	183,425	323	275
EA1FA	"	171,072	379	288
PE2K	"	153,564	389	268
JA3GN	"	152,391	254	237
SN3X	"	128,570	265	215
LZ5QZ	"	125,723	310	247
F5PHW	"	122,766	249	222
WK4U	"	103,082	218	199
EA1AER	"	88,077	233	187
YO2MBU	"	50,193	177	143
WA2NYY	"	48,240	151	120
MØHDF	"	46,294	192	158
RZ9CJ	"	38,025	122	117
IZ2QKG	"	29,475	158	131
NK5G	"	24,832	114	97
NN3U/4	"	20,328	85	84
				(OP:N4GU)
WC7S	"	19,760	115	95
KC9LIF	"	19,306	123	98
KU7Y	"	17,940	105	92
NQ2W	"	15,960	82	76
OK2FD	"	11,236	53	53
VR2UU	"	8,835	83	57
JG1SPS	"	7,493	71	59
BA2BI	"	4,888	53	47
YB2ERL	"	4,879	44	41
W6UB	"	2,320	30	29
JA1KEB	"	2,080	28	26
S53XX	"	1,500	36	30
ON3DI	"	72	8	8
LT7H	28A	449,298	481	327
				(OP:LU7HZ)
DH8BQA	"	107,550	266	225
HG5ØIPA	"	58,308	197	172
				(OP:HA3JB)
YO8WW	"	36,984	160	138
IZ3NVR	"	16,744	100	91
YT1BX	"	9,928	78	73
WG4FOC	"	3,080	37	35
				(OP:K3TW)
9A2VX	"	882	20	21
JRØBUL	"	322	15	14
OH2BV	21A	637,223	625	499
ON4RBO	"	603,785	610	455
				(OP:DL1EFW)
HA3HX	"	210,364	366	308
RD7K	"	155,841	306	287
UT3WS	"	101,972	244	212
R7FO	"	36,314	146	134
R6KEE	"	33,798	149	131
IK4OMU	"	27,730	123	118
DJ4CW	"	15,744	104	96
BH4RRG	"	8,940	63	60
VE6UM	"	7,784	63	56
VU2UR	"	6,384	60	56
VE3XD	"	5,217	49	47
PA9M	"	2,911	41	41
JR1LLD	"	1,071	21	21
JG7UVO	"	4	2	2
S51Z	14A	432,368	562	443
LZ2TU	"	379,741	587	433
IZ8JFL/1	"	327,494	547	439
RW4C	"	247,566	461	363
OZ/HA8MT	"	51,300	223	190
KU4A	"	18,423	94	89
A92AA	"	17,394	84	78
G3SVL	"	8,245	89	85
LB3RE	"	7,004	73	68
K2AL	"	6,300	52	50
DLØPCK	"	3,784	50	43
				(OP:DH8BQA)
N9NBC	"	3,266	48	46
KD2BGM	"	1,100	20	20
OL4W	7A	738,816	642	444
				(OP:OK1IF)
HA4FY	"	190,260	358	252
DMØY	"	153,270	315	234
				(OP:DH8BQA)
DJ7EC	"	38,375	135	125
UX9Q	"	31,784	121	116
WA8HSB/4	"	16,767	85	81
K9JWV/7	"	13,167	101	77
A96A	"	6	1	1
S55W	3.5A	285,729	447	303
				(OP:S5ØXX)
UT3L	"	87,970	238	190
				(OP:UR5LO)
8SØDX	"	81,450	226	181
				(OP:SMØDSG)
DFØTEC	"	61,918	199	166
				(OP:DH8BQA)
9A4DC	"	23,040	119	96
V31MA	"	14,190	63	55
OL1A	1.8A	94,050	256	190
				(OP:OK1CW)
YP8A	"	1,860	32	30
				(OP:YO8WW)
DFØUM	"	1,350	28	25
				(OP:DH8BQA)
IQ3NX	"	18	3	3
				(OP:IZ3NVR)

MULTI-OPERATOR SINGLE-TRANSMITTER HIGH POWER NORTH AMERICA UNITED STATES

United States - District 1

WR1ST	4,802,452	1875	877

United States - District 3

KD4D/3	14,636,193	3905	1199
NE3MD	412,657	495	353

United States - District 4

NY4A	13,295,233	3329	1223
NW9X/4	3,244,955	1460	805
NY4I	828,000	744	500
KC4D	181,521	296	243

United States - District 5

WK5T	12,275,040	3445	1284
K5UA	1,747,733	1008	577

United States - District 7

KU7T	6,134,680	2249	1030
WR5J/7	4,025,535	1878	835
KS7AA	942,006	844	507

United States - District 8

K8ES	2,298,100	1333	700

United States - District Ø

KGØF	13,269,285	3831	1299
KØLIR	1,158,832	903	536

Alaska
KL7RA 9,862,104 3100 1128

Canada
Canada - District 4
VE4EA 2,168,116 1196 631

Canada - District 7
VC7GL 7,627,439 2486 977
VE7FO 34,632 126 111

Cayman Islands
ZF1A 19,649,390 4603 1294

Montserrat
VP2MDG 16,654,780 4285 1270

U.S. Virgin Islands
KP2M 19,614,532 4891 1246

AFRICA
Morocco
5C5T 8,358,518 2626 938

South Africa
ZS9ØSARL 3,529,350 1489 682

ASIA
Asiatic Russia - District 9
RC9J 4,961,974 2065 802
UI9I 312,255 325 257
RK9CYA 84,747 207 159

Asiatic Russia - District Ø
RKØW 57,524 173 146

China
BA4DL 4,044,572 2084 812
B7P 3,533,285 1823 785
B4L 1,340,598 1013 541
BY1CQ 641,190 715 435

Cyprus
P33W 35,165,691 6865 1503

Japan - District 1
JA1ZGO 1,561,593 1004 599

Oman
A42A 5,738,416 2483 848

Thailand
E2X 2,130,804 1369 628

EUROPE
Belarus
EU1WW 1,444,400 1203 628

Belgium
OP4K 6,080,867 2629 1027

Crete
SW9AA 12,587,120 4382 1352

Croatia
9A5D 8,655,850 3344 1225

Czech Republic
OL3Z 11,129,010 3482 1270
OL7C 8,885,339 3210 1139
OL1C 6,711,464 2611 1037
OL2U 1,509,156 1236 618
OK5SWL 1,976 38 38

Denmark
OZ5E 9,129,288 2964 1176

England
G5D 7,161,505 2882 1105

Estonia
ES9C 18,609,024 5268 1472

European Russia
European Russia - District 1
RZ1AWT 241,839 489 351
RK1QWX 151,122 344 267

European Russia - District 3
RK3PWR 344,132 573 379

Fed. Rep. of Germany
DL7ON 6,485,544 2442 1066
DLØTUM 4,036,279 1968 923
DL1NKS 1,628,750 1206 625

Finland
OH1F 10,342,800 3719 1224
OH5Z 8,635,025 3293 1225

France
TM2Y 11,035,915 3568 1231
TM1A 7,746,038 2910 1082
F8UFT 2,427,425 1743 715

Greece
J42T 9,549,553 3409 1261
SZ1A 9,454,104 3654 1242

Hungary
HG6N 9,676,457 3523 1201

Isle of Man
MD4K 11,008,500 3928 1230

Latvia
YL1S 498,383 615 433

Lithuania
LY2J 3,900,312 1970 926
LY2XW 3,089,792 1914 808

Luxembourg
LX7I 14,609,628 4190 1401

Norway
LN8W 9,487,824 3204 1256

Poland
SO9Q 6,555,368 2411 1058
SP2KPD 2,839,716 1650 781

Romania
YR1C 12,763,520 4416 1295

Serbia
YT4RA 6,638,615 2355 1135

Sicily
II9P 15,154,218 4299 1402
IB9T 10,907,566 3899 1357

Slovak Republic
OM3RRC 4,373,768 2170 941
OM7LM 2,621,808 1546 756

Slovenia
S5ØC 9,669,942 3463 1182
S59T 1,711 30 29

Spain
ED3W 9,888,825 3662 1185

OCEANIA
Australia
VK4SN 3,956,325 1614 725

Indonesia
YE1C 2,375,566 1358 614

Philippines
DU1EV 168,844 281 191

SOUTH AMERICA
Brazil
PW2D 15,066,038 3350 1222
PS5A 3,841,131 1612 707
PR7DX 2,523,794 1148 637
PY7XC 1,765,290 982 570

Uruguay
CW7C 1,560,405 845 539

MULTI-OPERATOR SINGLE-TRANSMITTER LOW POWER NORTH AMERICA
UNITED STATES
United States - District 3
*W3HAC 110,960 247 190

United States - District 7
*WV7Q 3,000,340 1744 739

United States - District Ø
*WØDLE 4,596,948 2125 894

Canada
Canada - District 2
*VE2BWL 1,546,860 955 580

Canada - District 7
*VB7X 2,782,608 1459 696
*VA7MM 12,810 70 70

Grenada
*J38MM 1,518,912 1006 576

AFRICA
Tunisia
*3V8SS 14,577,216 3982 1104

ASIA
Asiatic Russia
Asiatic Russia - District Ø
*RYØA 1,082,403 799 483

Asiatic Turkey
*TC3P 19,099 81 71

China
*BY8DX 4,102,126 1931 791
*BD1LT 1,553,670 1006 610

Japan - District 1
*8N1ZUA 26,329 177 113
*JQ1ZPA 1,352 30 26

Japan - District 2
*JJ2YNR 185,885 354 235

Japan - District 3
*8N3HC/3 2,012,590 1307 643

Thailand
*HSØZIA 5,235,307 2115 883

United Arab Emirates
*A61BK 384 12 12

West Malaysia
*9M2JKL 50,479 177 143

EUROPE
Belarus
*EW4WE 33 4 3

Croatia
*9A7T 1,764,000 991 700

Denmark
*OZ/DJ5LA 701,328 819 456

European Russia
European Russia – District 3
*UA5A 2,394 46 42

Fed. Rep. of Germany
*DF5ØUSLAR 296,667 520 357

Finland
*OH6GDX 3,167,997 1652 937

France
*F4KJL 52,700 193 155

Hungary
*HA5KLR 406 15 14

Netherlands
*PI4DHV 371,884 664 389

Poland
*SN1D 55,706 195 161

Romania
YR5N 2,972,187 1690 837
*YO6KNY 158,000 318 250

Serbia
*YT5L 282,834 487 342

Sicily
*IT9SSI 20,384 104 104

Slovak Republic
*OM3KWZ 464,940 598 420

Slovenia
*S56ØCST 9,266 93 82

Ukraine
*UR4RWW 1,118,124 1047 567
*US2E 749,259 814 441

OCEANIA
Indonesia
*YE1ZAT 2,977,380 1429 695
*YE1ZAL 630 15 14

SOUTH AMERICA
Arba
*P4/N4QS 7,073,808 2248 888

Brazil
*PS8HF 2,156,175 1001 555

Chile
CE1CA 375,328 447 296

MULTI-OPERATOR TWO-TRANSMITTER NORTH AMERICA
UNITED STATES
United States - District 1
AI1D 3,057,705 1456 765

United States - District 3
WX3B 10,946,754 3236 1141
K3CCR 1,707,622 972 566

United States - District 4
N4WW 18,358,398 4874 1362
N1LN/4 18,284,160 4882 1335
NS1S/4 15,306,096 4424 1291

United States - District 6
WF6C 8,637,948 3263 1089

United States - District 9
K9CT 17,394,537 4728 1373

Canada
Canada - District 1
VE9ML 4,659,417 1701 801

Canada - District 3
VE3YAA 7,888,104 2570 987

ASIA
Asiatic Russia
Asiatic Russia – District Ø
RTØF 9,901,809 3363 1143

China
BY5CD 11,877,456 4018 1164
BD3RX 4,042,444 2037 826
B1Z 1,483,360 1164 584

Japan
Japan - District 1
7J1YAJ 11,133,654 3465 1239
JE1ZWT 4,174,844 1709 829
JA1ZGP 1,092,980 969 518

Japan - District 7
JA7YCQ 9,234 91 81

Mongolia
JT5DX 10,484,460 3312 1060

West Malaysia
9M2M 2,293,813 1520 667

EUROPE
Bulgaria
LZ5R 18,455,474 6048 1466
LZ7A 10,113,837 3741 1151

Croatia
9A6K 5,406 57 51

Czech Republic
OL4A 25,417,163 6528 1579

England
G5W 17,053,875 5139 1395
G5O 8,365,054 3439 1126

European Russia - District 3
RA5D 12,200,706 4219 1323
RT3N 4,091,220 2207 955

European Russia - District 4
UD4FD 1,208,272 1063 628
RO4A 634,500 733 500

Fed. Rep. of Germany
DM6V 18,742,207 5433 1433
DR5N 16,699,690 4959 1379
DM9K 16,192,455 4994 1345
DDØCC 14,423,340 4541 1335
DLØCS 14,352,723 4521 1341
DD1A 13,766,601 4426 1317
DR4A 7,184,186 2734 1114

Finland
OH9W 10,622,700 4229 1221

Hungary
HG7T 20,380,943 5856 1493

Lithuania
LY2W 18,315,760 5477 1415
LY4A 14,063,903 4813 1337

Serbia
YU5R 19,060,434 5720 1458

Spain
EC2DX 21,449,323 6034 1481
EC4TA 1,966,113 1342 837

Sweden
SK3W 17,496,068 5504 1396
SK6HD 2,616,192 1753 757

OCEANIA
Australia
VK3JA 6,297,156 2159 879

MULTI-OPERATOR MULTI-TRANSMITTER NORTH AMERICA
United States
NR4M 23,440,131 5835 1401
NR5M 21,079,630 5554 1430
AK6W 14,182,128 4654 1296

Canada
VC7J 15,065,919 4272 1221

ASIA
China
B7Q 5,011,524 2454 882

Japan
8J1ITU 2,191,834 1380 659

EUROPE
Bulgaria
LZ9W 26,711,100 7862 1522

Croatia
9A1A 33,890,549 8781 1631

European Russia
RT4F 242,760 424 340

Fed. Rep. of Germany
DL65DARC 7,210,911 3073 1051
DLØRUS 4,590 49 45

Lithuania
LY7A 15,529,154 5498 1303

OCEANIA
Philippines
DX1DBT 78,840 199 135

ROOKIE
United States
AB3TM A 399,840 435 340
*AEØEE A 399,798 503 342
*K5KUA " 55,626 143 127
*W8NOR/7 " 29,744 107 104
*AF5T " 28,441 133 119
*NØFN " 1,885 29 29
KDØFW " 192 8 8

DX
SQ6VIA A 153,468 321 252
A71MM 14 2,175 29 29
*CR7AJL A 1,202,420 1237 590
*VE5SDH " 241,415 346 265
*LB1JG " 171,536 421 284
*UT4UFZ " 135,296 274 224
RZ4AZ " 109,272 297 232
*DO6LE " 106,981 229 203
*VE3DXK " 94,050 179 150
*RK6HG " 92,530 208 190
*PA3FOE " 91,164 279 214
*RZ3DC " 67,932 175 148
*YY5LAY " 36,960 107 96
*JH1JNJ " 15,170 80 74
UR5IRM " 12,240 91 85
*IK5LWE " 8,640 66 64
RU7KD " 5,829 75 67
*IK8ARF " 1,904 30 28
9M2MDX " 893 18 19
*UR3QOD " 66 6 6
*LU8DCF 28 1,386 22 22
*EW1TO 21 276,528 414 336
*JR2MIO/2 " 3,652 49 44
*II5E 14 40,572 185 161
(OP:IZ5ZCO)
*YO6DMR " 15,345 95 93
*LA8FTA " 15,096 118 111
*RV3FW 3.5 51,852 172 149
*ER2RM 1.8 7,316 64 59
EA4GLJ AA 88,560 243 205
PP5NY 28A 182,744 301 212
*UC5D AA 485,483 658 409
*SV1RHL " 467,672 637 424
*BG2CTX " 152,750 291 235
*BH4PVP " 95,550 254 195
*BG3OJZ " 48,865 189 145
*VA3OB " 28,028 102 91
*M6IDO " 13,706 107 89
*IU3AZC " 10,270 93 79
*9M2PAT " 2,178 41 33
*OE1HXS " 780 20 20
*A92AA 14A 17,394 84 78
*A96A 7A 6 1 1

TRIBANDER/SINGLE ELEMENT
United States
N8OO/5 A 6,619,826 2649 1042
K3EL/2 " 5,087,208 1973 849
WQ4F " 5,023,326 2064 917
(OP:N4PN)
WN2O " 4,417,010 1800 793
(OP:N2GC)
WD5K " 3,608,295 1716 821
NC8C " 2,773,874 1353 706
(OP:K8MR)
AA7V " 2,012,100 1381 706
WQ5L " 1,859,848 1177 607
NX2X " 1,764,192 1010 564
W6AEA/7 " 1,729,773 1232 639
K9JF/7 " 1,207,713 842 519
KO7X " 1,161,050 992 550
KM4FOC " 987,698 797 479
KS7T " 803,700 784 470
N7FUL/5 " 792,580 771 460
KU8E/4 " 747,785 728 431
NO8DX " 443,368 519 353
(OP:K8MR)
NI6W " 276,555 411 309
(OP:W4EF)
K7HP " 269,010 375 294
NØBUI " 253,814 401 278
N4DU " 247,280 377 281
WA2VYA/5 " 176,559 309 229
AC6SL " 147,722 326 233
KM6I " 88,572 222 183
KØNW/6 " 67,716 186 162
ABØS " 49,680 158 144
K8CMO " 46,230 165 138
WA2CP " 21,894 92 89
(OP:KC2GOW)
K9EN " 20,055 111 105
KZ5J 21 487,224 564 404
N2JJ " 42,704 138 136
AI4WW " 7,581 60 57
N3XF 14 276,900 348 300
K9OM 7 191,250 251 225
K4EU " 36,955 95 95
KX9DX " 15,996 130 86
W6RKC 3.5 3,969 54 49
*KI6RRN A 2,393,640 1644 732
*KV8Q " 1,833,873 1172 591
*K2TTM " 1,545,805 903 505
*W4YE " 1,453,683 920 539
*W2MMD/3 " 1,338,370 937 529
(OP:WK2G)
*NF2RS " 757,552 682 452
(OP:K2ZR)
*KE2D " 681,720 611 380
*N2UU " 679,960 649 382
*N6MU " 651,000 603 434
*KT8K " 650,702 635 377
*KM6Z " 636,004 785 398
*KZ1M " 622,905 596 393
(OP:W1EQ)
*N5KWN " 620,075 673 425
*WB8TLI " 619,752 550 372
*KIØI " 587,200 560 367
*KB3LIX " 563,904 547 352
*KC2IGE " 395,164 442 308
*K5ME " 370,944 440 322
*NO5W " 357,072 495 346
*W1TO " 347,215 407 295
*WØQQG/4 " 320,682 412 291
*K1TN/4 " 249,360 337 240
*K7DR/8 " 206,336 343 256
*KW3F " 200,143 322 263
*W9RF " 188,244 313 252
*K7HBN " 182,532 302 246
*K4OSO " 171,570 284 210
*WC4E/1 " 128,380 242 196
*NA5NN " 107,653 241 169
(OP:W5UE)
*AC2IK " 94,336 222 176
*K1SX " 48,608 138 112
*NC6Q " 47,724 219 164
*N8FYL " 45,752 161 133
*K6CSL " 39,150 158 135
*NY4G " 38,227 150 127
*KG1K " 34,335 112 105
*K1RO " 27,977 108 101
*KØTC " 23,540 125 107
*AB7MP " 22,624 126 101
*NE8J " 18,972 108 102
*KB6A " 16,517 87 83
*K6III " 11,461 74 73
*N4ARO " 9,030 47 43
*WAØLJM " 8,680 80 70
*KM4FO " 7,800 81 75
*KM2L " 6,768 49 47
*KI6OY " 5,529 70 57
*KS4X " 3,996 38 37
*NX4N " 3,360 37 32
*KA6JLT/7 " 2,800 48 40
*WA8AXF " 1,664 35 32
*W4ZPR " 1,386 22 22
*NØKOE/4 " 1,066 31 26
*WB9VKZ " 494 19 19
*W9AKS " 273 13 13
*K7TR " 160 11 10
*KZ5OM/6 " 40 5 5
*KE7TEK 28 684 19 19
(OP:W9CF)
*WR5O 21 487,179 566 407
*KM4HI " 175,016 289 262
*W7ON " 14,196 87 84
*N6BHX " 1,152 25 24
*NJ3K 14 352,179 475 359
*N4HA " 198,810 303 282
*KE3O " 903 20 21
*WA4FJK " 240 10 10
*KØPK 7 366,900 395 300
*WN4AFP " 225,147 382 251
*N2JNZ " 74,106 145 138
*AA1CA 3.5 1,040 28 26
K3MD AA 4,489,764 1952 822
N3QE " 3,859,726 1651 754
K1AR " 2,962,376 1441 706
AB3CV " 2,736,034 1354 667
NF4A " 2,724,796 1435 727
N6JV " 2,144,532 1296 708
WX6V " 2,005,966 1155 697
KU2C " 1,983,828 1052 627
K7JQ " 1,793,875 1253 635
W2CDO/3 " 1,781,648 980 583
W2LE " 1,662,878 901 574

NS9I	"	**1,433,161**	**981**	**557**
NSØR	"	*1,172,340*	*1041*	*540*
NA2U/7	"	1,015,170	978	494
W6SX	"	921,672	986	502
NB3R	"	755,307	616	399
N2BJ/9	"	737,632	556	518
K2DSW/Ø	"	**731,136**	**572**	**448**
K3IT	"	607,523	583	413
W9AV	"	603,339	656	389
KI7Y	"	593,880	695	392
K6ZB/5	"	*551,307*	*507*	*381*
KG4W	"	518,196	523	372
NE6I	"	477,055	681	365
NS4X	"	335,072	448	296
KX7L	"	318,478	427	323
NA2M	"	315,648	375	288
W3JX	"	294,408	314	261
NK6A	"	286,752	460	309
AK6M	"	285,740	415	314
			(OP:K6MM)	
K9DR/7	"	279,850	379	290
W7DRM	"	184,264	304	248
WA7LNW	"	165,792	278	264
W9VA	"	164,472	267	231
W6NS	"	112,359	251	201
NS3L	"	96,832	187	178
AB9CD	"	86,700	189	170
WE6Z	"	75,082	199	173
KV1E/Ø	"	53,721	146	141
W4XO	"	43,014	110	107
KA2D	"	42,435	131	123
AI6Z	"	18,144	84	72
K6IFF	"	574	15	14
W9ILY	**21A**	**852,548**	**630**	**524**
AA7CR	"	**665,331**	**623**	**463**
			(OP:K5ZM)	
K3OQ	"	**7,897**	**54**	**53**
WØGXA	**14A**	**1,028,422**	**796**	**566**
WA3AAN	**7A**	**720,263**	**484**	**373**
**WW4SF*	*AA*	*2,653,500*	*1343*	*732*
			(OP:N4XL)	
***NE9U**	"	**2,197,525**	**1360**	**671**
*N9UA	"	1,087,083	830	477
*N3CZ/4	"	946,360	754	472
***KØVBU**	"	**785,961**	**696**	**467**
*W1CCE	"	620,400	572	376
*KØRI	"	504,350	504	385
*NZ3D	"	504,084	521	357
*K8BL	"	472,696	491	367
*W2RDS	"	472,320	479	320
*N4KM	"	457,431	477	317
*N4WO	"	350,436	480	318
*KC8R/Ø	"	344,962	477	346
*WT9Q	"	317,856	467	344
*WGØM	"	281,112	391	318
*WB9G/2	"	277,104	374	276
*K3NDM	"	228,438	347	259
***K3WYC/7**	"	**185,040**	**295**	**257**
*NJ1T	"	172,500	268	230
*W2FDJ	"	165,244	289	218
*WD4AHZ	"	138,675	235	215
*K9PY	"	136,740	246	212
*K6AAB	"	119,180	271	202
*KE6QR	"	118,770	260	214
*AF7S	"	102,243	255	197
*KA1SSU/3	"	81,356	226	172

*W4BW	"	57,408	157	138
*AD5XD	"	54,432	160	144
*WO9B	"	50,440	148	130
*N9LJX	"	45,539	123	113
*KV1J	"	32,239	117	103
*AI2I	"	25,344	100	96
*KC9LIF	"	19,306	123	98
*KU7Y	"	17,940	105	92
*NQ2W	"	15,960	82	76
*AB9M	"	5,289	44	43
*AD1L	"	5,117	44	43
*KB4KBS	"	4,816	43	43
*N4YHC	"	3,157	45	41
*KE1J	"	1,860	23	20
*KØEZW	"	216	9	8
***KE7DX**	**28A**	**3,838**	**41**	**38**
***N1VVV**	"	**216**	**10**	**9**
***AB1J**	**21A**	**228,438**	**349**	**294**
*WT1A	"	90,016	207	194
*KU4A	14A	18,423	94	89
***WØEA/5**	"	**7,869**	**63**	**61**
*WA8HSB/4	7A	16,767	85	81
***K9JWV/7**	"	**13,167**	**101**	**77**
*W7VO	"	5,852	53	44
		DX		
7Z1SJ	**A**	**6,221,492**	**2085**	**886**
EW2A	"	**6,170,109**	**2582**	**1033**
9A2AJ	"	**4,618,880**	**2108**	**896**
S57C	"	**4,382,400**	**2177**	**830**
S55M	"	4,123,196	1908	847
OA4SS	"	**4,116,924**	**1698**	**714**
OM7RU	"	**3,964,378**	**1994**	**869**
UC7A	"	**3,805,758**	**2143**	**894**
HL1VAU/4	"	**3,393,597**	**1826**	**769**
DJØSP	"	2,767,872	1727	816
7Z1JA	"	2,315,304	1249	648
			(OP:KE5JA)	
SM3C	"	**2,186,470**	**1453**	**715**
			(OP:SM5CCT)	
OH1ØA	"	1,569,563	1419	643
			(OP:OH1HS)	
YO2LEA	"	**1,403,467**	**1077**	**611**
GW7O	"	**1,383,915**	**1197**	**611**
			(OP:GW3SQX)	
F/G4BJM	"	1,380,037	1194	587
RA1AL	"	1,306,868	1097	628
IK3UNA/1	"	999,580	1068	530
RWØBG	"	836,682	673	462
NP2L	"	**801,804**	**660**	**436**
IQ2BG	"	712,932	763	484
			(OP:IK2AHB)	
JR3BOT	"	658,788	636	412
BH4IGO	"	**636,587**	**619**	**431**
VU2CVS	"	**529,659**	**525**	**351**
UAØKBG	"	469,200	471	368
VK2GR	"	**385,890**	**387**	**285**
OK2SFP	"	**361,938**	**514**	**358**
JF9JTS	"	**337,804**	**435**	**316**
OH2VZ	"	325,768	452	344
IZ4DZD	"	294,678	448	321
JA6AVT	"	270,230	441	305
WH7W	"	**217,554**	**312**	**202**
IK3DVY	"	*197,087*	*304*	*253*
DJ5QV	"	156,857	289	227

JI5NWQ	"	**156,780**	**287**	**234**
JQ1ABC	"	**147,976**	**259**	**212**
RU4AA	"	124,423	258	221
JJØPJD	"	121,730	238	185
MXØIRN	"	**118,080**	**335**	**240**
			(OP:G4IRN)	
JH1HIC	"	109,804	236	194
R3BB	"	98,000	241	196
OH1BOI	"	91,104	253	219
JA1EPJ	"	78,554	200	181
G4HZV	"	71,925	191	175
HB9DUS	"	27,195	119	105
JN3QNG	"	22,600	114	100
JL1LNC	"	2,784	37	32
JS3LSQ	"	1,656	27	24
VK3GDM	"	1,240	21	20
JI1DSU	"	578	17	17
JA6CDC	"	8	2	2
YR8I	**28**	**183,125**	**396**	**293**
			(OP:YO8BIG)	
VY1EI	"	**1,029**	**21**	**21**
CT3KN	**21**	**7,064,082**	**2342**	**1017**
SV9COL	"	**323,635**	**444**	**383**
EW8W	"	**8,418**	**68**	**61**
JA9CWJ	**14**	**1,303,588**	**823**	**583**
EF1A	"	**762,910**	**800**	**535**
			(OP:EA1XT)	
JA5NSR	"	**274,482**	**353**	**306**
JA3DAY	"	**113,098**	**218**	**193**
OG25YL	**7**	**1,483,874**	**1017**	**581**
VK6SMK	"	**1,995**	**19**	**19**
YT4A	**3.5**	**656,358**	**679**	**417**
			(OP:YT1AA)	
Z35F	"	**471,466**	**589**	**361**
EW8DX	"	**461,890**	**584**	**374**
***5H3EE**	**A**	**7,648,901**	**2765**	**923**
***VE3DZ**	"	**6,096,765**	**2186**	**885**
***WP4X**	"	**5,940,480**	**2404**	**896**
			(OP:NP3A)	
***OR2F**	"	**5,022,711**	**2262**	**939**
			(OP:ON8LDS)	
***MD2C**	"	**4,013,338**	**2062**	**878**
			(OP:MDØCCE)	
***VO1TTT**	"	**3,720,028**	**1606**	**676**
			(OP:VE9AA)	
***M7Q**	"	**3,481,398**	**1935**	**807**
			(OP:G4PIQ)	
***C56XA**	"	**3,006,172**	**1406**	**676**
			(OP:G3XAQ)	
***PA/W1NN**	"	**2,458,410**	**1544**	**681**
***JI1RXQ**	"	**2,424,906**	**1235**	**662**
***HA1BC**	"	**2,183,265**	**1326**	**717**
			(OP:DL1MAJ)	
*SP1AEN	"	2,166,387	1496	673
***SE4E**	"	**1,888,908**	**1452**	**678**
			(OP:SM4DQE)	
*SC3N	"	1,800,864	1427	666
			(OP:EA8CN)	
*DL5KUD	"	1,769,630	1185	653
***SW8WW**	"	**1,467,900**	**1233**	**630**
			(OP:HAØHW)	
***Z62FB**	"	**1,371,076**	**1281**	**644**
			(OP:DL7FER)	
*RN9RF	"	1,218,698	839	494
*VE3EY	"	1,186,048	795	452
***FS/K9EL**	"	**942,720**	**770**	**480**

***JE4MHL**	"	**916,204**	**767**	**452**
***IK4EWX**	"	**893,235**	**932**	**543**
*DJ4MH	"	828,282	880	481
***LA2HFA**	"	**806,823**	**812**	**471**
***KH6CJJ**	"	**746,640**	**672**	**340**
*IR1X	"	739,713	997	507
(OP:IZ1GLX)				
*OZ1AAR	"	735,840	702	511
*RW5CW	"	684,440	755	482
*VE3MGY	"	592,802	586	322
*OK1BA	"	591,888	722	456
***YO5AXF**	"	**572,660**	**732**	**418**
***OH8MBN**	"	**554,472**	**633**	**453**
***CO2RQ**	"	**536,176**	**574**	**376**
*SM7CIL	"	533,408	603	422
*LA4CQ	"	516,627	741	419
*JE1SGH	"	478,564	541	362
*G4DDL	"	446,854	642	373
***JG5DHX**	"	**437,524**	**525**	**356**
*UT5T	"	433,504	593	368
***YB4IR/7**	"	**417,956**	**461**	**308**
***TI2OY**	"	**417,229**	**488**	**313**
*R3VL	"	389,640	583	382
***P4/K1KG**	"	**386,104**	**434**	**289**
*UX8IX	"	379,857	567	381
***UA9FGJ**	"	**321,678**	**446**	**378**
*DL3MVC	"	310,616	519	328
*F5VLY	"	305,276	489	334
*DK2WU	"	270,230	425	305
***3D2KM**	"	**269,477**	**386**	**247**
			(OP:W6ZL)	
*LY3G	"	267,121	487	323
*JA3IBU	"	261,690	380	286
***RT4P**	"	**254,184**	**474**	**357**
*OK6OK	"	248,927	451	301
*JA2QVP	"	230,740	366	278
OK2BJK	"	*229,330*	*444*	*323*
***JHØNEC**	"	**225,389**	**313**	**257**
*UA9NP	"	215,109	315	257
*PA3DBS	"	214,415	441	305
*OM7SR	"	208,208	387	286
*G3RLE	"	208,088	397	296
*YO9CWY	"	189,158	360	271
*9A2BD	"	183,662	388	262
*RD3FV	"	178,360	351	280
*JF1WNT	"	173,475	284	225
***XE2AU**	"	**170,325**	**292**	**225**
*EW4EW	"	169,858	344	278
*UR5EPV	"	167,580	365	252
*RX3AGQ	"	158,424	326	276
***UA1CUR**	"	**156,607**	**308**	**253**
*UX7UU	"	155,740	332	260
*OH5YU	"	154,785	328	255
*SM5KQS	"	149,624	332	236
*I5YKQ	"	147,846	352	246
*GM4UBJ	"	141,093	358	257
*YO2LDU	"	140,286	308	227
*JN3TSY	"	136,656	260	208
*UR5UJ	"	127,370	296	235
*SP9CXN	"	115,758	278	218
*JH3WKE	"	112,132	243	194
*VE3BR	"	104,994	200	171
***HS3LSE**	"	**101,742**	**269**	**186**
*JA6CVR	"	100,274	268	181
*JJ1KZZ	"	99,416	198	172
*DL3HQN	"	98,928	280	216

*RA9YE	"	91,866	214	183
*LZ5IL	"	91,065	216	195
*JG1AVR	"	89,170	222	185
***GWØBBO**	"	**86,976**	**252**	**192**
*UT5EPP	"	84,630	283	210
*IK5/DL5RDP	"	74,844	237	189
*SF3A	"	70,092	209	177
			(OP:SM3CER)	
*R2EA	"	66,738	185	147
*JR1UJX	"	65,952	210	144
*DH5MM	"	64,558	192	169
*PT2AW	"	62,967	157	139
*LZ8Z	"	62,524	244	196
			(OP:LZ2HT)	
*GØJSP	"	61,030	202	170
*DL5CL	"	57,105	159	141
*S51I	"	49,572	175	153
*JR3RIU	"	49,200	143	120
*JA3EBT	"	48,374	180	134
*UA4CNJ	"	47,047	164	143
*UW7CN	"	43,818	151	134
*JA1IE	"	39,750	139	106
***RØCM**	"	**39,058**	**177**	**118**
*DF7GG	"	35,280	125	112
*9A/DF2AJ	"	34,715	153	131
*RX9DJ	"	32,946	128	114
SP9EML	"	*32,604*	*131*	*114*
***RU6CO**	"	**31,944**	**135**	**121**
*RC6AE	"	31,512	120	101
			(OP:RU6BL)	
*LU5FF	"	29,376	106	96
*IW5BT	"	24,395	122	119
*SV7CUD	"	23,562	117	102
*UA6LCJ	"	22,968	96	87
***JE8KKX**	"	**20,560**	**102**	**80**
*VA3DBT	"	16,456	85	68
DL2LFH	"	*14,976*	*104*	*96*
*G4OGB	"	14,208	104	96
*YO4RST	"	14,134	82	74
*OK1NF	"	13,968	111	97
*YO2LCP	"	13,685	84	85
*PV8AA	"	12,288	73	64
			(OP:PV8DX)	
*JA1CRJ	"	6,072	48	46
*JE1GZB	"	4,888	62	52
*IK3TPP	"	3,792	49	48
*YO3FGO	"	2,325	32	31
*PA1B	"	2,205	50	45
***OE5HIL**	"	**1,836**	**27**	**27**
*JO3XCK	"	1,480	25	20
***JE7PNN**	"	**1,206**	**20**	**18**
*F5VHP	"	1,148	29	28
*EA4CU	"	900	25	25
*VU3PRH	"	561	17	17
*DD5MA	"	252	14	14
*JG3LDD	"	252	12	12
*JL2OGZ/2	"	112	8	7
***HGØR**	**28**	**142,800**	**323**	**255**
			(OP:HAØNAR)	
***RV9YK**	"	**3,977**	**43**	**41**
***G3ZNR**	"	**399**	**24**	**19**
***JK8PBO**	"	**384**	**16**	**16**
***JH6SCA**	"	**294**	**15**	**14**
***JA1GZK**	"	**180**	**10**	**10**
PV8DX	"	*18*	*3*	*3*
***UA3ABJ**	**21**	**615,840**	**649**	**480**

Oops…

In the schematic for September's "New Uses for Old Tubes" article (p. 26), the ground symbol on the primary of T1 is an error ... the two black wires here are not grounded.

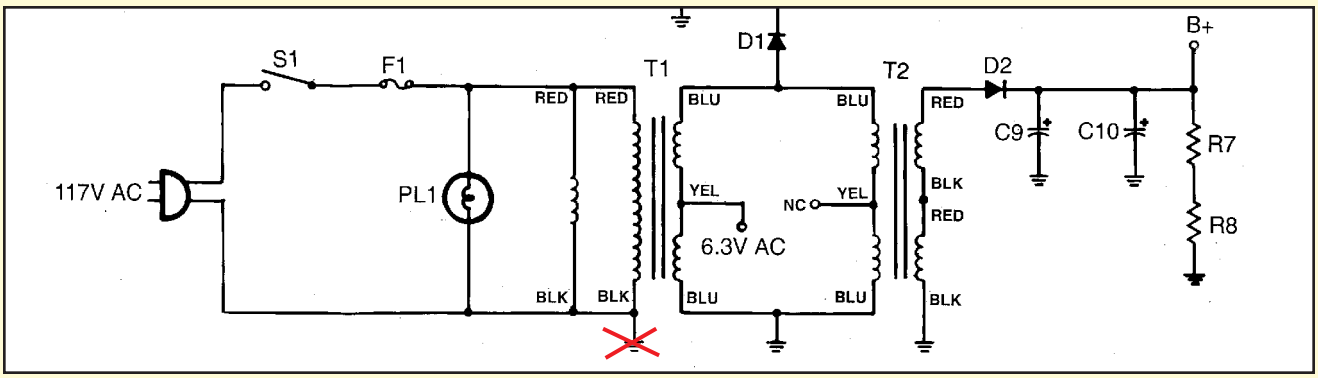

*JR4GPA	"	520,201	534	361
*YO2IS	"	377,702	483	398
*OK2BUT	"	331,111	408	341
*ZS6DX	"	145,644	240	212
*PG2AA	"	140,896	300	259
*JA7VEI	"	118,230	227	210
*UR2VA	"	92,990	197	170
*JF1GZZ	"	73,684	186	169
*YO5NY	"	71,600	192	179
*SM6TOL	"	62,124	194	186
*JA2HYD	"	35,816	135	121
*VU2MUD	"	27,832	105	98
*UP2F	"	25,641	100	99
			(OP:UN8FM)	
*7K1EQG	"	22,989	97	97
*YO2MCK	"	21,185	96	95
*BA1SN	"	21,049	100	97
*JA4TUJ	"	17,630	86	86
*JH4FUF	"	11,858	83	77
*UT7MR	"	11,205	91	83
*JF1AZQ	"	7,011	61	57
*WP4F	"	5,980	52	52
*UA1CAK	"	5,850	46	45
*DH6YMC	"	5,400	56	54
*JA1MZM	"	4,545	48	45
*JO1WIZ	"	21	3	3
*LZ2JE	"	3	1	1
*HG6C	14	1,358,720	1091	704
			(OP:HA6IAM)	
*DL9ZP	"	1,265,920	1020	688
*SA6G	"	1,187,360	1051	656
*S59N	"	996,324	1077	609
*SBØA	"	365,940	642	428
			(OP:SMØLPO)	
*LY2BUU	"	344,000	508	400
*G4C	"	152,110	368	287
*SQ5RDX	"	104,784	272	236
*F5VJL	"	100,380	276	239
*A65CB	"	96,288	204	177
*S57YK	"	93,696	295	244
*IK1ZFO	"	91,568	280	236

*EW8OG	"	24,523	152	137
*SP9OHL	"	24,198	116	111
*VK5LJ	"	18,798	86	78
*ZM1M	"	12,672	72	66
			(OP:ZL1BBW)	
*DL6HCC	7	684,156	639	438
*S51J	"	410,848	493	347
*G3ZGC	"	393,435	417	315
*UX5UU	"	385,320	425	338
*S51DX	"	361,504	497	316
*SP7P	"	161,928	302	234
*ON6NA	"	126,096	267	222
*GØT	"	102,185	248	191
*R2OM	"	39,634	156	133
*JE2BOM	"	30,186	98	86
*SP4AWE	3.5	300,390	463	310
*EE3X	"	150,975	289	225
			(OP:EA3KX)	
*HA1TI	1.8	39,804	165	124
*HA5NB	"	34,845	154	115
*HB9CPS	"	15,908	101	82
R4RR	AA	8,090,523	2986	1197
UI2K	"	7,291,166	2729	1138
M2X	"	4,947,172	2269	967
			(OP:G3VMW)	
YL9T	"	4,838,000	2374	1000
			(OP:YL2TW)	
LA8OM	"	4,656,771	2262	903
F5VKT	"	4,355,491	1962	911
DL/KU1CW	"	3,965,848	1949	904
JHØINP	"	3,753,140	1707	820
OQ5M	"	3,747,625	1892	875
			(OP:ON5ZO)	
EU5C	"	3,306,478	1770	826
			(OP:EW1HI)	
R8WO	"	3,300,295	1300	697
DL5YM	"	3,079,916	1701	812
RØQA	"	3,042,301	1500	751
IT9RBW	"	2,971,252	1602	892
DP3D	"	2,750,116	1591	818
			(OP:DK3KD)	

OG4T	"	2,679,244	1469	842
			(OP:OH4MFA)	
IKØYVV	"	2,649,600	1578	768
UA1ANA	"	2,470,160	1586	770
IK8UND	"	2,420,080	1488	845
RC4HAA	"	2,389,770	1732	835
			(OP:RU4HY)	
PY2KJ	"	2,213,820	1154	588
F8CRS	"	2,150,397	1169	709
LZ3ZZ	"	2,141,100	1495	732
LA7GIA	"	1,997,632	1529	686
LY2K	"	1,995,574	1487	686
A65CA	"	1,965,625	1152	629
UI3A	"	1,890,470	1327	790
RO9A	"	1,866,200	914	602
ZR9C	"	1,753,953	994	573
			(OP:ZS6WN)	
SV1ENG	"	1,665,368	1417	712
GI5I	"	1,503,128	1145	589
			(OP:GI4DOH)	
ON6NL	"	1,258,155	987	657
IZ3EAW	"	1,207,206	1115	603
JN3SAC	"	1,112,217	817	519
OE2LCM	"	1,079,630	948	535
R3VO	"	1,003,770	877	570
HA8TP	"	917,412	856	534
IZ2DII	"	910,188	867	524
RT5C	"	816,232	777	514
DJ6OZ	"	793,002	774	478
UT5ECZ	"	783,545	704	427
HB9DQL	"	741,502	731	458
RA1QD	"	704,385	657	495
9A3XV	"	662,025	636	455
I2WIJ	"	545,706	599	426
YL2VW	"	536,042	575	389
RAØAM	"	521,970	548	381
PP5AX	"	442,728	428	286
DL6ZBN	"	427,063	496	361
HI3TT	"	383,640	439	345
DL5LYM	"	338,625	404	315
JA6SRB	"	318,155	394	323

UA9AGX	"	258,531	319	273
VA6XDX	"	219,356	320	244
			(OP:VE6LB)	
OH6BA	"	177,366	340	246
9A2KD	"	152,382	329	218
JH1OAI	"	146,790	252	210
JH1OVY	"	142,738	245	214
JR6CSY	"	118,440	275	210
JI1LAT	"	102,480	212	183
YO5CUQ	"	60,150	162	150
F5CQ	"	57,536	130	124
JJØJML	"	53,940	192	155
RAØSMS	"	50,619	161	141
JL3RDC	"	16,776	93	72
OK6DJ	"	9,656	71	68
JN3TMW	"	8,476	61	52
G6VMR	"	4,940	55	52
JK3NSD	"	2,697	32	29
JA1XUY	"	1,904	41	34
DF5AU	"	1,456	26	26
UAØW	"	348	12	12
OZ8AGB	"	90	9	9
4XØA	28A	185,261	293	229
			(OP:4X1VF)	
EF5R	"	123,970	338	245
			(OP:EA5BWR)	
UN5J	"	18,792	94	87
JA1BPA	"	13,104	82	78
M3I	21A	1,898,124	1151	734
			(OP:GØORH)	
HB2T	"	1,232,777	1109	589
			(OP:HB9BUN)	
MMØAMW	"	350,574	453	357
RA9UN	"	280,260	360	324
JH8CXW	"	32,148	120	114
HL5YI	"	31,360	117	112
JS1KQQ	"	408	12	12
G4AFJ	"	18	3	3
UA9LAO	14A	2,937,000	1311	825
UA4WI	"	2,510,865	1609	945
RG5R	"	1,096,188	1044	668
UT2PX	"	780,388	757	593
HA5NR	"	434,768	568	464
JH1APK	"	243	9	9
I2IFT	7A	1,233,486	804	522
JO7KMB	"	148,607	229	173
G3PHO	"	128,843	214	187
9A2G	1.8A	4,841	50	47
*VP9/DL3YMAA		5,348,693	2024	833
*NP2P	"	4,554,564	1848	826
			(OP:N2TTA)	
*UT4LW	"	4,379,875	2300	947
*TM6M	"	4,060,992	1815	832
			(OP:F4DXW)	
*DL6RAI	"	3,981,516	1698	924
*DJ8OG	"	3,903,210	1751	930
*UR6EA	"	3,727,500	2020	852
*LZ4T	"	3,650,568	1853	888
*RT9S	"	3,402,812	1403	742
*SP9H	"	2,863,168	1290	913
*YU9ØIARU	"	2,846,208	1740	768
			(OP:YT2AAA)	
*LY2AJ	"	2,349,295	1597	769
*OM6RM	"	2,229,703	1455	697
*GM4X	"	2,138,340	1563	681
			(OP:GM4WZG)	
*UA5F	"	1,966,614	1396	741
*OK5ZZ	"	1,934,676	1154	732
*DK5DQ	"	1,884,960	1137	672
*OU2M	"	1,813,032	1279	676
			(OP:DK3WE)	
*S57KM	"	1,715,472	1378	627
*ED2A	"	1,712,752	1221	641
			(OP:EA2CW)	
*OM5XX	"	1,705,559	1194	697
*E77AW	"	1,702,856	1368	659
*GIØRQK	"	1,444,528	1177	659
*UT2IO	"	1,428,210	1251	630
*PA9WOR	"	1,376,046	1059	603
*JF3NKA	"	1,059,821	846	503
*L33M	"	985,157	719	461
			(OP:LU3MAM)	
*9A5ST	"	876,808	907	508
*SDØT	"	858,648	837	532
			(OP:SMØTHU)	
*LX/OO9O	"	858,585	973	481
			(OP:ON7SS)	
*OK7MT	"	835,635	743	493
*DM3PKK	"	810,376	792	499
*SV4FFL	"	751,440	910	496
*9A8W	"	741,285	707	513
*SM3OMO	"	688,228	713	493
*JL3MCM	"	684,084	603	436
*JS1KKY	"	669,496	574	424
*DF7ZS	"	667,212	572	507
*DL6DH	"	634,522	725	427
*DL1HBT	"	623,820	669	444
*ON7VD	"	603,581	538	407
*R2DFD	"	591,828	696	447
*EW1IP	"	518,748	581	417
*UR5IFB	"	479,360	636	428
*UX3IW	"	443,336	505	302
*RM2D	"	382,155	560	365
			(OP:SM6LRR)	
*IQ5AE	"	352,240	446	370
			(OP:IZ5IOV)	
*JR2NMJ	"	344,925	421	315
*LY2N	"	338,174	513	353
*DD9WG	"	326,859	425	377
*RA9X	"	311,454	526	363
*PC4H	"	308,490	479	339
*EW1NA	"	272,800	485	341
*JH6QIL	"	271,035	457	285
*DK2DQ	"	252,120	437	264
*JG1EIQ/3	"	243,000	361	270
*PY4LH	"	228,932	362	242
*EB1RL	"	225,630	425	327
*XV4Y	"	219,042	341	258
*LY2BBF	"	211,992	399	292
			(OP:LY4BF)	
*DJ9SN	"	199,360	392	280
*MØJWB	"	196,308	395	266
*4Z5TK	"	153,300	246	210
*BG9XD/5	"	152,012	312	244
*IW7DMH	"	147,318	299	258
*HA8CQ	"	141,126	343	258
*RW4CLF	"	120,696	251	188
*EB2RA	"	92,169	204	171
*JG2RZF	"	91,560	229	168
*BG6LQZ	"	69,472	203	167
*DD1MAT	"	60,588	183	153
*IK2CFD	"	55,132	173	154
*OK4FX	"	53,874	168	146

*DL8ZAJ	"	49,010	169	145
*UT8EU	"	40,986	160	138
*DF5TR	"	34,077	124	111
*IZ2QKG	"	29,475	158	131
*BG4OGO	"	28,865	149	115
*ER3DX	"	26,864	104	92
*VU2ABS	"	22,270	91	85
*OH4KZM	"	21,504	122	112
*B4/DF9LJ	"	16,598	96	86
*JH4PHW	"	15,840	99	90
*JJ1WWL/1	"	15,466	77	74
*JF3GFH	"	11,679	58	51
*DG7RO	"	11,247	77	69
*LY2DV	"	9,394	83	77
*YB1UUN	"	8,892	54	52
*JG1SPS	"	7,493	71	59
*SQ9IAU	"	7,398	59	54
*RU3U	"	7,080	62	60
*ON7PX	"	5,766	63	62
*VK3MEG	"	5,250	46	42
*JA1KEB	"	2,080	28	26
*JI3QGQ	"	1,675	25	25
*LA8CJ	"	968	25	22
*BH4SKP	"	276	12	12
*5W1SA	28A	502,335	570	305
*S53V	"	256,743	434	333
*IT9RZU	"	246,012	572	332
*VE3IAE	"	4,255	42	37
*RAØWKV	"	45	5	5
*JA2KVB	21A	1,168,398	777	594
*RU4SO	"	600,692	665	526
*EA3NO	"	119,140	260	230
*EW1FM	"	99,450	240	221
*UA9UX	"	59,770	155	139
*DF4WC	"	57,152	172	152
*IK4OMU	"	27,730	123	118
*JA4AQR	"	19,068	85	84
*JK1FUP	"	1,881	37	33
*YB2ECG	"	940	20	20
*IZ8EFD	14A	1,385,595	1072	751
*CE3AA	"	1,281,675	765	575
			(OP:XQ4CW)	
*Z39A	"	1,123,820	1003	677
*S54X	"	941,488	798	652
*ON5JT	"	678,240	806	540
*9A3TY	"	674,883	743	561
*IZ8JFL/1	"	327,494	547	439
*OM4O	"	316,389	515	401
			(OP:OM3NI)	
*DL5GAC	"	252,339	442	361
*JF6RIM	"	212,895	344	285
*7K4VPV	"	174,317	285	253
*UT1IM	"	54,936	174	168
*PY2VM	"	45,384	132	124
*JE2VYM	"	9,724	70	68
*EA2GM	"	7,728	61	56
*LB3RE	"	7,004	73	68
*M6W	7A	2,018,016	1103	637
			(OP:G3WW)	
*UR5LAM	"	1,469,344	956	584
*9A4MX	"	1,452,672	801	576
			(OP:DJ2MX)	
*YU2A	"	1,419,292	877	586
*YO2NAA	"	1,377,470	838	565
*9A1AA	"	1,107,574	774	533
*G1N	"	1,078,925	737	515
			(OP:G3MZV)	
*RV6LCI	"	693,440	574	440
*ZM3T	"	130,938	176	139
			(OP:W3SE)	
*JG1FKT	"	63,888	150	121
*JA2PFO	"	37,534	110	98
*SP2WGB	"	36,618	119	102
*SP4GL	3.5A	468,026	556	383
*YO5LD	"	361,200	506	344
*S55W	"	285,729	447	303
			(OP:S5ØXX)	
*JR4VEV	"	6	1	1
*UW1U	1.8A	25,515	127	105
			(OP:UT7UA)	

CHECK LOGS

9A2SW, 9M6XRO, A45XR, AB3AI, AG6V, AO15ØA, AO15ØI, AO15ØN, AO15ØO, AT15ØITU, BD4AGK, BG3GEF, BG4HRM, BH4QBV, CT1EGF, CX2AQ, DJ1SL, DK7MD, DLØWRTC, DL1KID, DL2AJB, DL3TU, DL6UAM, DL7GEM, DL7USW, DL7UXG, DM5DX, DR2Q, E71A, E72U, E73QI, EA1CBX, EA5YI, EA7AHA, EA7AZA, EA7TG, EA7UU, EC7AKV, EC7WA, ED1R, EE2A, EF3A, EI3CTB, EI5KF, EI7CC, EI7IG, EI9KC, ES7MB, EU1FQ, EU1KY, EU2MM, EU6RO, GØMDR, G3SQU, G3UHU, G3VAO, G4AYU, G4DDX, GW4BLE, HAØGK, HA1DAE, HA1RJ, HA1SN, HA3PT, HI3LFE, HK3W, IW3IAU, IZ8FWN, JA1JPM, JA1PCM, JA5TNF, JA8FFM, JA9XAT, JE2OOQ, JG2GSY, JG7QQA, JH1ERJ, JH1OES, JH3KAI, JJ4CDW, JJ8GFL, JN1VFF, JR6AG, JS1IFK, K1MC, K4RUM, K6OK, K7GA, KH6CS, KJ6MBW, KK7L, KN5S, LA1U, LA4NL, LA4PM, LY1CT, LY3NX, LZ1MDU, LZ4TU, MØTQR, M5KJM, MW5R, N4QX, N5IJE, N6CW, NK4K, NO6F, OH2BFG, OK1DMP, OK1FAI, OK1TA, OK2BHD, OK2BPU, OK2BZ, OK2PAY, OK2RN, OK7T, OP1A, OT4T, PP2RON, PP5KR, PT9DX, PY1KR, PY1NP, PY1TL, PY3DX, PY7OJ, R2AB, R2LAC, R3AT, R3IJ, R4IT, R6YY, R7RC, R9YP, RAØTG, RA1CE, RA1QE, RA3AV, RA3THN, RA3WDK, RA9DZ, RA9LT, RC3U, RM5C, RM6AA, RQ3M, RVØCG, RV3ID, RWØCR, RWØLL, RW3DKK, RW9WT, RX9WN, RZ3F, RZ6DX, SMØQ, SO3F, SP2MHD, SP3L, SP4GDC, SP6BPY, SP6HEQ, SP6QKP, SP6T, SP6TRH, SP8JMA, SP9NLI, SP9VFD, SQ5IRO, SQ7RL, TF3SG, TK5MH, UAØLBF, UA3DJY, UA3P, UA3SKV, UA4AAC, UA4NAL, UA4NCI, UA6ATG, UA9R, UB3DAO, UR4L, UR4LZZ, UR5WCW, USØTA, US6CQ, UT2AB, UT2WQ, UT3IJ, UT3UCP, UT8NT, UW1WU, UW5RG, UX2IB, UX5UN, V73NS, VA3KSF, VA7BWG, VE3NZ, VU2CDP, WØGUY, W6YA, YL2TD, YL3GDM, YO2DFA, YO2GL, YO3DAC, YO4KAK, YO9CB, YU1XX, YV5KG, ZS5XT, ZZ9ØIARU

Disqualified: W6AWW

what's new

Icom Gives Birth to IC-7300

Icom's latest entry into the HF transceiver market was introduced at the Tokyo Hamfair and features a bevy of options that usually come in larger radios. The first thing people will notice on the IC-7300 is the large color TFT display that can be used as a touch screen to control the radio. This interface can easily set various functions and memory contents. However, the big addition is the high-resolution, real-time spectrum scope that comes loaded onto the IC-7300. It features a waterfall function that provides top-level performance in resolution, sweep speed, and dynamic range.

A multi-dial knob complements the TFT display by controlling menu items that appear on the right side of the display. You can select an item with a touch of the screen and adjust levels by turning the knob.

A new receiving circuit called *RF Direct Sampling System* has been integrated into the IC-7300 over the traditional superheterodyne system. Usually seen in software-defined radios, RF signals are processed through the FPGA (Field-Programmable Gate Array), which makes it possible to eliminate physical mixer and filter devices. With RF direct sampling, Icom claims that the phase noise characteristics are improved by 15 dB.

Getting those signals to the receiver circuit is the antenna tuner built into the 9.45- x 9.37- x 3.75-inch case, which is small enough for portable operation.

Icom said that it is waiting for FCC approval and pricing was undetermined as of press time. For more information, contact: Icom America Inc. 12421 Willows Road NE, Kirkland, WA 98034. Phone: (425) 454-8155. Email: <sales@icomamerica.com>. Website: <http://www.icomamerica.com>.

Additional Features:

- Voice memory function
- Memory keyer function for CW and RTTY
- RTTY decode log function
- SD card slot
- USB for CI-V and audio input/output
- 101 memory channels
- 100-watt output power
- SSB, CW, RTTY, AM, and FM modes.

Note: *"What's New" is not a product review and does not constitute a product endorsement by* CQ. *Information is primarily provided by manufacturers/vendors and has not necessarily been independently verified.*